PIUSI

By TATSUNO EUROPE a.s.

SELF SERVICE HD

Installation, Use and Maintenance Manual **EN**

BULLETIN MO852EN_00

ITALIAN

BULLETIN MO852EN_00

INDEX

1. INTRODUCTORY INFORMATION 6
1.1. READ THE MANUAL FIRST 7
1.2. INTENDED USE 7
1.3. HEALTH AND SAFETY 8
1.3.1. LIST OF SAFETY FACTORS 8
1.3.2. USER OBLIGATIONS 8
1.3.3. DANGER 8
1.3.4. PERSONAL PROTECTIVE EQUIPMENT 9
1.3.5 SAFETY IN THE DESIGN OF DEVICES 9
1.3.6. FIRST AID PROCEDURES 10

2. PIUSI SELF-SERVICE HD DISPENSERS 11
2.1. DESCRIPTION OF THE DISPENSERS 11
2.2. CERTIFICATES AND APPROVALS 12
2.2.1. METROLOGY 12
2.2.2. SAFETY 13
2.2.3. ELECTROMAGNETIC COMPATIBILITY (EMC) 13
2.3. BASIC TECHNICAL SPECIFICATIONS 14
2.4. HD SELF-SERVICE DISPENSERS 15
2.5. TERMINOLOGY OF THE MAIN PARTS OF THE DISPENSER 16
2.5.1. FUEL DISPENSER/MODULE FOR DIESEL / BIODIESEL / HVO / XTL 16
2.6. IDENTIFICATION PLATES 18
2.6.1. POSITION OF PLATES 19

3. INSTALLATION 22
3.1. OCCUPATIONAL SAFETY INSTRUCTIONS 22
3.2. RECEIPT, TRANSPORT, UNPACKING 22
3.2.1. HANDLING OF THE DISPENSER 23
3.3. POSITION OF THE DISPENSER 24
3.3.1. GENERAL 24
3.3.2. INSTALLATION OF DISPENSERS WITH RESPECT TO HAZARDOUS AREAS 25
3.3.3. DISTANCE OF THE DISPENSER FROM A TANK 26
3.3.4. TYPE OF LIQUID FUEL TANK 26
3.3.5. PIPING DESIGN 29
3.3.6. SUCTION SYSTEM 29
3.4. MECHANICAL MOUNTING OF THE DISPENSER 30
3.4.1. INSTALLATION OF THE COLLECTION TRAY 30
3.5. ELECTRICAL CONNECTION OF THE DISPENSER 32
3.5.1. POWER SUPPLY FOR THE ELECTRIC MOTORS OF THE DISPENSER PUMPS 33
3.5.2. POWER SUPPLY TO THE ELECTRONIC METER AND OUTPUT LINE SWITCHING COMPONENTS 35
3.5.3. SIGNAL OUTPUT LINES 36
3.5.4. CABLE SPECIFICATIONS 36

4. DISPENSER SETUP AND BASIC FUNCTIONS 38
5. OPERATION 39
5.1. INSTRUCTIONS FOR SAFE OPERATION 39
5.2. PUTTING THE DISPENSER INTO OPERATION 40
5.3. OPERATION OF THE DISPENSER 42
5.3.1. FUEL DISPENSING 42
5.3.2. OPERATING MODES OF THE DISPENSER 43
5.3.3. AIR SEPARATION SENSOR (VRS1.G & ZE-2063) 44
5.3.4. AIR VENT 46
5.3.5. DESCRIPTION OF THE PDEDIL V6 DISPLAY 47
5.3.6. DISCONTINUATION OF DISPENSER OPERATION 48
6. MAINTENANCE AND SERVICE 49
6.1. BASIC PRINCIPLES OF DISPENSER MAINTENANCE 49
6.1.1. MAINTENANCE OF DISPENSER COVERS 51
6.1.2. CALIBRATION OF THE METER 51
6.2. TROUBLESHOOTING AND RESOLVING DISPENSER FAULTS 57
6.2.1. DISPENSER ERROR MESSAGES 58
6.2.2. EVENT LOG 67
6.3. DISPENSER SUPPORT 68
6.3.1. ACCESSORIES 68
7. INSTALLATION PLANS 69
7.1. FUEL DISPENSER ANCHORING 69
7.2. FOUNDATION PLANS FOR FUEL DISPENSERS 70
7.2.1. SELF-SERVICE HD 71
7.2.2. PIPE CONNECTIONS 73
8. ELECTRICAL DIAGRAMS 75
8.1. FUEL DISPENSER 76
8.1.1. SUCTION-TYPE DISPENSER 76
9. EX ZONES 77
9.1. FUEL DISPENSERS 78
9.1.1. PIUSI SELF SERVICE HD 78
10. DEMOLITION AND DISPOSAL 79

INTRODUCTION

This manual has been customized by Tatsuno Europe a.s., as the product manufacturer, for PIUSI Spa, as the dispenser.
This manual is intended for owners of PIUSI SELF SERVICE HD electronic dispensers, service and installation personnel, service station design offices, and owners of fueling stations where the dispensers are installed and used.
It is recommended that you study this manual carefully.
The manual must be available to the operator during installation, operation, and routine maintenance of the dispenser.

- Keep this manual for the entire operational life of the device
- Make it available to subsequent owners or users
- Perform the update, see https://www.piusi.com/products/fuel-management-unit-self-service-hd

The content of this manual is accurate as of the date of publication. The manufacturer reserves the right to modify the
technical specifications of the device or its features without written notice, as a result of its development and continuous improvement.
All rights reserved. No part of this manual may be reproduced or transmitted without the manufacturer's written approval.

1. INTRODUCTORY INFORMATION

Symbols used in this manual:

Warning	**Explosion hazard**	**Warning! Electrical equipment**
Warning	**Note**	**Warning**
No smoking	**Do not use open flames**	

Terms used in this manual that require special attention:

CAUTION	Failure to comply with the requirements indicated with this term may create conditions that could result in personal injury, death, or significant property damage.
WARNING	Failure to comply with the requirements indicated alongside this term may result in personal injury and/or damage to the dispenser.
NOTICE	Items indicated with this term draw the reader's attention to legal and/or regulatory requirements governing the installation and use of dispensers. Failure to comply with these requirements may create a hazardous situation and/or cause damage to the dispenser.
NOTE	Items marked with this term are intended to draw the reader's attention to installation procedures, techniques, and operating methods, etc., that are important for ensuring the correct installation and proper operation of the dispensers and that, if not followed, may result in damage, failure, or poor performance of the dispensers.
RECOMMENDATION	represents an action recommended by the manufacturer to optimize the safe and proper use of the product.

1.1. READ THE MANUAL FIRST

Read and understand the relevant sections of the Installation, Maintenance, and Operation Manual before installing and operating the dispenser. Take into account all hazards, warnings, and notes listed in the manual. The manufacturer has prepared this Installation, Maintenance, and Operation Manual to provide all the information and instructions necessary for the complete and efficient installation, use, and maintenance of PIUSI SELF SERVICE HD dispensers.
This manual has been prepared by the manufacturer and is an integral part of the dispenser's accessories.
The user is fully responsible for the use of this manual; all operations not described in this document are to be considered prohibited. The operator performing such operations is fully responsible for the results of their actions. The manual is divided into individual sections, which are in turn divided into subsections, so that each topic is independent and corresponds to the operational logic (learning - preparation - use - maintenance).
The manual reliably reflects the technical conditions at the time of the dispenser's sale and cannot be considered inaccurate due to subsequent modifications and updates made based on the latest information.

NOTICE

Keep the manual and attached documents for the entire operational life of the device for future reference!

1.2. INTENDED USE

PIUSI SELF SERVICE HD dispensers are designed for fixed or mobile installation for the dispensing of liquid fuel (DIESEL, BIODIESEL up to B100, HVO/XTL) in a specified quantity from a fuel tank to a vehicle's fuel tank, or for refueling vehicles.

CAUTION

Dispensers are complex devices that must perform a series of demanding functions. Therefore, before commissioning, it is necessary to clean the tanks and pipes and verify the cleanliness of the fuel (a clogged filter in a dispenser cannot be considered a valid reason for warranty repair)
Before commissioning, it is necessary to inspect the wiring and verify the correctness of the connections to prevent electric shock injuries and ensure explosion safety (fuels are Class I flammable liquids).

NOTICE

Any modification to the dispenser may invalidate the device's certification. If you intend to make modifications to the wiring and/or the device, consult the manufacturer's certification documents and instruction manuals.

Each dispenser has undergone appropriate factory testing for operation, safety, and metrology. The delivery of each dispenser also includes the certification documents.

1.3. HEALTH AND SAFETY

1.3.1. LIST OF SAFETY FACTORS

All liquid fuels (DIESEL, BIODIESEL up to B100, HVO/XTL) may only be stored in tanks and containers compatible with these liquids.

Areas requiring special attention

- The interior of a tank, piping, storage pits, filling pits, discharge pits, containers, and dispensers.
- All areas where fuel vapors may accumulate and where such vapors are heavier than air, such as drainage pits, low-lying rooms, basements, trenches, etc.
- Areas surrounding tank vents, particularly during refueling.
- Any location near the dispensing point, truck tanks, and other vehicles during dispensing, particularly in windless conditions.
- Filters.

1.3.2. USER OBLIGATIONS

- To ensure optimal accident prevention, in addition to general user protection standards, national legislation regarding user protection must also be taken into account, and all measures aimed at improving safety standards must be actively supported.

1.3.3. DANGER

Before beginning installation, the dispenser must be isolated (i.e., completely disconnected from the power supply) and the main switch must be turned off. Control signals from the dispenser must also be isolated. This ensures the safety of technicians. As an additional precaution, turn off the main power supply in the service station booth and post a clear warning to prevent it from being accidentally turned on. The dispenser must not be turned on until it has been inspected and approved by an authorized technician. Such authorization is subject to relevant national legislation.
Removed packaging and covering materials must be handled in such a way as to prevent damage to parts and personal injury. Hinged covers, such as those on the meter box, must be handled with care. Ensure that the pins are in the correct position to prevent the cover from falling on the head of the service technician or other people.
For unmanned refueling stations, the installation and user manual must be available to all end users. It must be placed in a visible location on the notice board and sufficiently illuminated to be readable at night. For unmanned refueling stations, quick-release couplings (sold as accessories) must also be used to reduce the risk in the event of departure after the fuel nozzle has been left in the vehicle's fuel tank.

WARNING

Only qualified and authorized personnel may connect and disconnect the system from the electrical supply. Work in hazardous areas must be performed in compliance with all applicable legal regulations.

1.3.4. PERSONAL PROTECTIVE EQUIPMENT

Protective Clothing	During installation and maintenance of the dispenser, the following protective clothing must always be worn: • Safety helmet. • Protective (conductive) footwear. • Protective leather gloves. • Antistatic clothing. • Eye protection.
Protective protection for working in hazardous environments	When working in a hazardous environment, the following safety equipment must be worn: • Only spark-proof tools are permitted when working on the dispenser. • Work on the bearings is permitted only when using standard tools approved for this type of work. • The use of power tools is strictly prohibited. • Only explosion-proof work lights are permitted. • The use of telecommunications devices in hazardous areas is strictly prohibited.
Safety **Safety**	The following safety instructions must be observed during installation and maintenance: • Avoid inhaling fuel vapors. Take appropriate measures and, if necessary, use a respirator. • Avoid direct skin contact with fuels. • Wear protective clothing and appropriate gloves. • Prevent fuel spills. • Smoking and open flames are prohibited. • Long hair and ties can get caught in moving parts. Hair must be properly covered.

1.3.5 SAFETY IN THE DESIGN OF DEVICES

THE SAFETY OF THE DEVICE IS GUARANTEED BY THE MANUFACTURER

The dispenser's design meets the requirements of standards **EN 13617-1 and EN IEC 60079-0** and is designed to operate in environments marked with the symbols II 2G IIA T3 indicated on the dispenser's type label.

With regard to operational safety in potentially explosive environments, the dispenser has undergone a conformity assessment, and the documentation has been filed in accordance with Article 10, Paragraph 1b (2) of Government Decree No. 116/2016 Coll. (Article 13, paragraph . 1b(ii) of Directive 2014/34/EU of the European Parliament and of the Council) at a physical-technical testing institute in **Ostrava-Radvanice, Notified Body No. 1026 with file number A484-16**.

Operational Safety	The operator is responsible for the operation of the refueling station and is required to entrust its operation only to qualified employees holding the relevant authorizations. The attendant's task is to fill the storage tanks competently, in compliance with all safety regulations.

Responsibilities of the operator:

- Keep the equipment in safe and proper working condition.
- Immediately inform the operator of any malfunction, defect, or anomaly during operation of the equipment and immediately take the equipment out of service in case of danger.
- Always keep the device tidy and clean and ensure that no unauthorized persons are in the vicinity of the device.
- Immediately inform the operator of any circumstances that prevent the operator from operating the equipment (in the event of sudden illness).
- Record the start and end of the shift, inspections performed by the operator, and maintenance, repair, inspection, and testing work in the operations log.
- The attendant at the refueling station must not perform repairs on the machinery or modify the settings of safety devices on their own initiative.

A special case is represented by service interventions

A service technician must not compromise operational safety during repairs and other activities. Take special care when removing the dispenser covers to avoid injury to yourself or a customer. When handling electrical components, they must ensure that the power supply is safely disconnected. Only approved components may be used for component replacement. All parts subject to approval must always be installed in accordance with the conditions specified in the technical documentation (airtightness, grounding, electrostatically conductive dispensing hoses, etc.).

1.3.6. FIRST AID PROCEDURES

Safety instructions for all products must be available at the refueling station.
These instructions contain important health and safety information regarding individual products and specific precautions to be taken in case of prolonged contact, inhalation, or ingestion.

2. PIUSI SELF-SERVICE HD DISPENSERS

2.1. DESCRIPTION OF THE DISPENSERS

All dispensers operate in manual mode—independently, offline.
All structural parts (covers, doors, lids, frames, etc.) are made of painted sheet steel.
Each dispenser is equipped with an electronic meter featuring self-diagnostics and a display showing the fuel quantity in liters.

Dispensers and modules for dispensing fuels such as DIESEL, BIODIESEL up to B100, HVO/XTL, are equipped with hydraulic components (pumping unit, piston meter, pulse generator, etc.) ref. Table 1.
The pump block is equipped with washable stainless steel filters at the inlet and outlet (100 µm/70 µm), a vapor and gas separator, a check valve, and a rotary pump with operating pressure control. The high-precision four-piston meter can be controlled by a single piston. Each flowmeter contains a non-explosive pulse generator (pulser) that detects the speed of the meter shaft and sends pulses to the electronic meter. The dispensing hoses are made of high-quality, gas-resistant rubber with an antistatic design and are equipped with automatic dispensing stop sensors. The dispensed fluid is drawn from the fuel storage tank by the dispenser and passes through the flexible connecting hose and check valve into the pump block, where it is filtered and air is separated. The separated air is freely discharged from the pump into the hydraulic section of the dispenser. The clean fuel flows from the pump block through a check valve to the piston meter and from there through a solenoid valve that controls the fuel flow in the dispensing hose; it is then delivered to the vehicle's fuel tank via the dispensing nozzle.
In the event of a high amount of air in the fuel (damaged lines, lack of fuel in the tank, etc.), the sensor that measures the flow of separated air, located at the outlet of the monoblock separator, is activated and causes the dispensing to stop.

	Device type	Marking	ATEX Certificate	MID certificate	Note
1	Monoblock , Qmax 90 L/min.	FP-1001-B02	FTZÚ13 ATEX0168X	TCM141/ 07-4491	pump + separator
2	Piston meter, Qmax 90 L/min.	FM-1007	FTZÚ03 ATEX0022	TCM141/ 07-4491	-
3	Pulse generator, optoelectronic	EK-1025	FTZÚ04 ATEX0094X	TCM141/ 07-4491	Part of counter 4, Ex d design
4	Electronic counter	PDEX5	-	ZR141/ 18-0175	all types of dispensers

Table 1 – Dispensing and metering equipment

The main advantages of PIUSI SELF SERVICE HD dispensers are:

- High performance, long service life, and guaranteed quality.
- Easy maintenance and servicing, simple design.
- Wide range of operating temperatures.

2.2. CERTIFICATES AND APPROVALS

The PIUSI SELF SERVICE HD dispensers manufactured by Tatsuno Europe and distributed by PIUSI Spa comply with all European standards regarding metrology and safety. Table 2 contains a list of valid European certificates regarding metrology and safety.

Piusi Model	**Designation of type**	**Manufacturer**	**Dispensed Fluid**	**ATEX Certificate**	**MID certificate**
Self Service HD 80 lpm Self Service HD 40-110 lpm	BMP511.SR/H BMP522.SR/UH/S	TATSUNO EUROPE a.s.	Diesel	FTZÙ 03 ATEX 0022	TCM 141/07-4491
			Biodiesel up to B100		
			HVO/XTL		
HD Service 80 lpm BSmart Self-Service HD 40/110 lpm BSmart	BMP511. SR/H/ BSMART BMP522. SR/UH/S/ BSMART	TATSUNO EUROPE a.s.	Diesel	FTZÙ 03 ATEX 0022	TCM 141/07-4491
			Biodiesel up to B100		
			HVO/XTL		

Table 2 - MID & ATEX Certificate for Dispensers

2.2.1. METROLOGY

All dispenser series have been tested and certified by the Czech Metrology Institute in Brno, European Notified Body No. 1383. The conformity assessment for liquid dispensers was carried out in accordance with "B" procedures (type examination) + "D" (quality assurance of the production process), in accordance with Government Decree No. 120/2016 Coll., which establishes technical requirements for measuring instruments and implements Directive 2014/32/EU of the European Parliament and of the Council in the Czech Republic. OIML R117 and OIML D11 tests were performed on all devices, and an EU type certificate (the so-called MID certificate) was issued.
The manufacturer has obtained System Quality Management Certificate No. 0119-SJC006-07 from the Czech Metrology Institute, thereby fulfilling the eligibility requirement for the declaration of conformity to type based on the quality assurance of the production of measuring instruments in accordance with Appendix No. 2, Procedure "D" (Chapter 6) of Government Decree No. 120/2016 Coll. The validity of the certificate is verified annually through audits.

2.2.2.SAFETY

The dispensers have been tested and certified by the authorized body No. 210—the Institute of Physical and Technical Testing in Ostrava-Radvanice, a notified body No. 1026 for use in potentially explosive atmospheres in accordance with Directive 2014/34/EU.
The dispensers have been certified as compliant with European standards for the construction of dispensers and machinery located in potentially explosive areas—EN 13617-1, EN IEC 60079-0, EN 1127-1.
All dispensers and their components located in potentially explosive areas comply with European ATEX Directive No. 2014/34/EU. For liquid dispensers located in a potentially explosive area, a European type certificate known as the ATEX certificate has been issued—see Table 2.
Each dispenser undergoes electrical testing (connection integrity, insulation resistance, high-voltage test, resistance of the terminal cap at the dispenser's grounding point) during the manufacturing process, as well as pressure testing and an operating pressure test. The results of all tests are recorded in the production documentation or a test report is issued.
The manufacturer has received Quality Assurance Certificate No. FTZÚ 02 ATEX Q030 for fuel dispensers and accessories from the Institute of Physical and Technical Testing in Ostrava-Radvanice. The validity of this notification is verified annually through audits.

2.2.3.ELECTROMAGNETIC COMPATIBILITY (EMC)

All PIUSI SELF SERVICE HD dispensers have been certified by the Czech Metrology Institute in Brno, Notified Body No. 1383. The conformity assessment of the equipment was carried out in accordance with Directive 2014/30/EU of the European Parliament and of the Council, in accordance with Government Decree No. 117-2016 on the conformity assessment of products in terms of electromagnetic compatibility, and in accordance with OIML R117 and OIML R139 standards.

2.3. BASIC TECHNICAL SPECIFICATIONS

Pumping performance	**Standard**	**Increased (/H)**	**Very high (/UH)**
Maximum flow rate Qmax [L/min]	From 30 to 50	70 to 80	110 to 130
Minimum flow rate Qmin [L/min]	3 to 5*	5	10
Minimum measured quantity - MMQ [L]	2	5	10
Maximum pressure [MPa]: • **Suction version**	0.18	0.25	0.25
• **pressure version**	0.35		
Minimum pressure [MPa]	0.16		
Maximum volume (number of digits)	999999(6) or 1999999(6.5)		
Scale range [L]	0.01		
Display type	Electronic		
Type of dispensed fluid	Diesel, biodiesel up to B100, HVO, XTL		
Dynamic viscosity range of the liquid [mPa·s]	From 0.5 to 10		
Mechanical particle filtration	Pump inlet filter > 100 µm; pump outlet filter > 70 µm		
Fluid temperature range [°C]	-20 to +50**		
Ambient temperature range [°C]	-25 to +55		
Accuracy class	0.5		
Mechanical class	M1, M2 for PDEX5 and TBELTx meters		
Electromagnetic class	E1, E2 for the PDEX5 meter		
Humidity	Condensation		
Position	Outdoor		
Unit of measurement	Volume [L]		
Electronic counter	PDEX5		
Software version (W&M checksum)	1.01 (4573), 1.02 (dbd2FFA4)		
Calculator power supply	230 V ±10%; 50 Hz; max. 300 VA		
Pump electric motor	3x400 V/230 V; 50 Hz; 0.75 kW; 1410 rpm		
Solenoid valves	Proportional; +24 V DC/max. 1 A		

Table 3 – Dispensers and modules (diesel, biodiesel, biodiesel up to B100)

*Flow rate range Qmax: Qmin must be 10:1.
**The fluid temperature range is defined by the range of the temperature measurement sensor.

2.4. HD SELF-SERVICE DISPENSERS

PIUSI SELF SERVICE HD dispensers are standardly produced in a suction version with a right-hand single-sided (R) design, featuring a dispensing hose for liquid fuel (diesel, biodiesel up to B100, HVO, XTL) and a dispensing nozzle on the side of the dispenser. The nozzle is either free-hanging or hinged via a spring-loaded hinge (-HS).
List of standard PIUSI SELF SERVICE HD models:

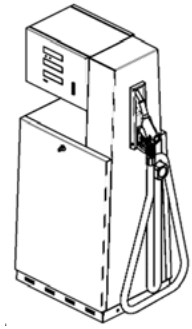 **Dispenser model**	**Dispenser access (2-double-sided, 1-single-sided)**	**Number of products (number of pumps or outlets)**	**Number of meters (number of metering systems)**	**Number of dispensing guns (number of dispensing hoses)**	**Number of displays**	**Pumping performance (L/min)**
Piusi Self Service HD 80 lpm	**1**	**1**	**1**	**1**	**1**	**80**
Piusi Self Service HD 40/110 lpm	**1**	**1**	**1**	**2**	**1**	**40/110**

Table 4 – List of PIUSI SELF SERVICE HD models

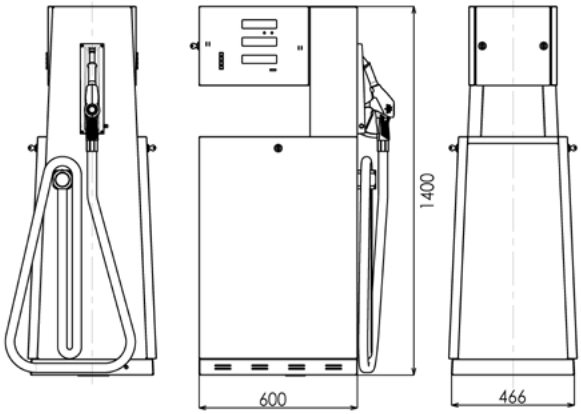

Figure 1 - Standard models of PIUSI SELF SERVICE HD dispensers with side-mounted nozzle

2.5. TERMINOLOGY OF THE MAIN PARTS OF THE DISPENSER

2.5.1. FUEL DISPENSER/MODULE FOR DIESEL / BIODIESEL / HVO / XTL

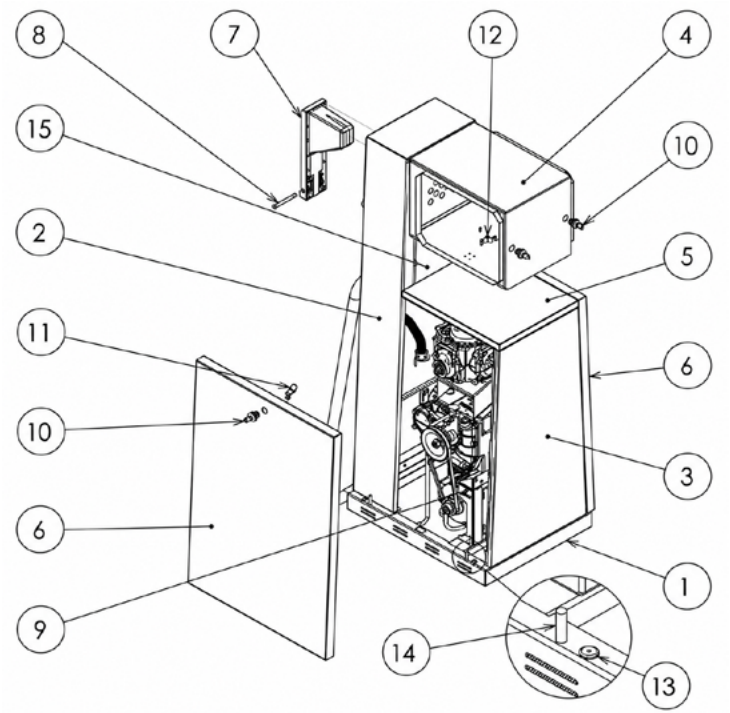

Figure 2 - Key components of the PIUSI SELF SERVICE HD dispenser

Pos.	Device	Pos.	Device
1	Hydraulic base	**9**	Pump console
2	Vapor recovery column	**10**	Lidokov lock (Z9-1)
3	Front column	**11**	Lidokov lock - Toll Barr (door)
4	Meter cabinet	**12**	Lidokov lock - Toll Barr III (cabinet)
5	Hydraulic roof	**13**	Rubber plug in base 12-07
6	Door - Sheet metal	**14**	Pin cover 6x31
7	Gun sheath	**15**	Column cover
8	90 mm bar		

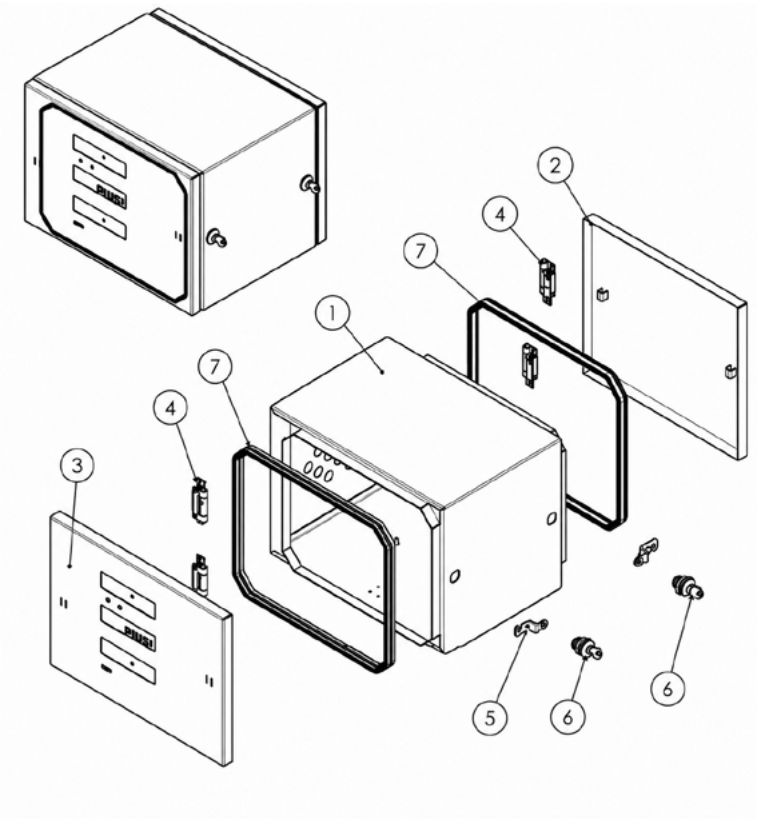

Figure 3 - PIUSI SELF SERVICE HD dispenser cabinet

Pos.	Device	Pos.	Device
1	Cabinet	**5**	Lidokov Lock - Toll-Bar III
2	Panel A - Blind	**6**	Lidokov lock (Z9-1)
3	Panel A - TBELT2/1x (without keypad)	**7**	Rubber gasket for cover 19.0374
4	Hinge for Lidokov RT48 panel		

2.6. IDENTIFICATION PLATES

Each dispenser is equipped with a nameplate, see Figures 4/5.
All data regarding the dispenser in terms of metrology and safety according to WELMEC 10.5 and European standards for equipment located in potentially explosive areas (EN 13617-1 and EN IEC 60079-0) are contained on the nameplate.
At the same time, the orientation label is used for metrological inspection to affix the metrological safety labels certifying that the measurement system has been verified.

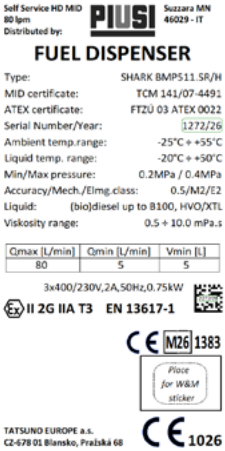

Figure 4 - Identification plate of the Piusi Self Service HD 80 lpm dispenser

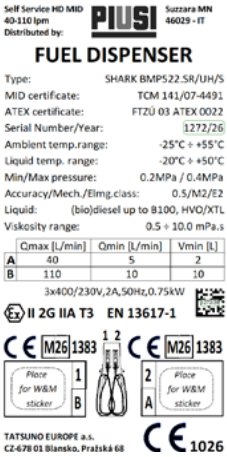

Figure 5 - Identification plate of the Piusi Self Service HD 40/110 lpm dispenser

2.6.1. POSITION OF PLATES

Several nameplates are affixed to the dispensing system to provide the operator with the most important information. Check that these do not deteriorate or come off over time.

NOTE

If this situation occurs, please contact our service department to have a copy of the damaged or missing nameplates sent to you, so you can reattach them where they were originally intended.

The following plates are present:

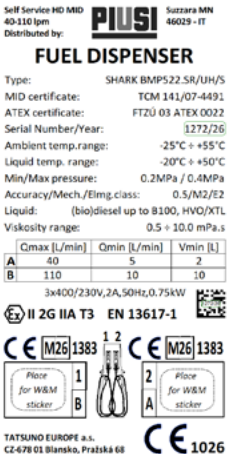

1. Figure 6 - Example of CE label with technical data:

2. Figure 7 - Sample corner label affixed to the box

3. Figure 8 - Sample QR code label with a link to the installation, use, and maintenance manual: https://www.piusi.com/support/search-manuals

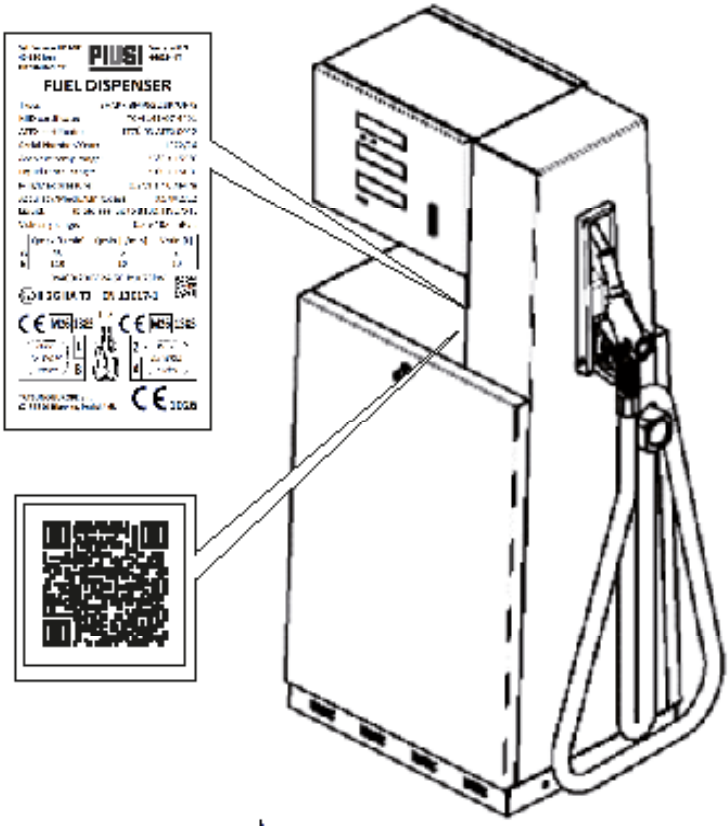

Figure 9 - Label location diagram

CE 1383	The dispenser's labeling indicates that it has been designed, manufactured, and labeled in accordance with European Commission directives. The dispenser is subject to type examination certification in accordance with Directive 2014/32/EU - MID, carried out by Notified Body No. 1383 - ČMI Brno
CE 1026	The dispenser's labeling indicates that it has been designed, manufactured, and labeled in accordance with European Commission directives. The dispenser is subject to type examination certification in accordance with Directive 2014/34/EU - ATEX, carried out by Notified Body No. 1026 - FTZÚ Ostrava Radvanice
LIQUID FUEL DISPENSER	Device identification
Type of	Dispenser type marking (see section 2.4)
MID certificate	Number of the EU metrological certificate approving the meter type - ČMI
ATEX Certificate	Number of the EU type examination certificate (ATEX certificate) – FTZÚ
Number	Dispenser serial number (sequential number / year of manufacture)
Temperature range of the fluid/medium	Temperature range of the liquid, fluid, or gas dispensed for which the dispenser was designed and approved
Min/max pressure	Minimum and maximum operating pressure
Accuracy class / Mechanical class / Electromagnetic class.	Accuracy class / Mechanical class / Electromagnetic class
Diesel / Biodiesel up to B100 / HVO / XTL	Type of liquid or fluid for which the dispenser is designed and approved
Qmax	Maximum pumping/filling flow rate in l/min.
Qmin	Minimum pumping/filling flow rate in l/min.
MMQ	Minimum consumption in liters.
Ex **II 2G IIA T3**	Identification of the protection of a non-explosive electrical device: II 2 – device for environments with explosion hazards other than underground mines, likelihood of explosive atmospheres forming – Zone 1 G – the explosive atmosphere consists of gases, vapors, or mists IIA – gas group – the least hazardous T3 – maximum temperature of an electrical device that could cause the surrounding atmosphere to ignite (200 °C)
EN 13617-1	Number of the European standard under which the dispenser has been approved
Motor power supply	3x400/230 V; 2 A; 50 Hz; 0.75 kW

Table 5 - Information on the dispenser and module label

3. INSTALLATION

3.1. OCCUPATIONAL SAFETY INSTRUCTIONS

CAUTION	• **Installation of this unit must be performed by qualified personnel in accordance with relevant local codes, regulations, and restrictions, as well as these instructions.** • **Smoking or the use of open flames is prohibited in the immediate vicinity of the dispenser.** • **Always follow safety procedures for handling fuels.** • **Check the dispenser for leaks. In the event of fuel, fluid, or gas leaks, disconnect the power supply and contact a service organization.** • **The electrical installation must be performed by qualified personnel.** • **Ensure that a functional fire extinguisher is available.** • **When handling the unit, use appropriate protective equipment.**

3.2. RECEIPT, TRANSPORT, UNPACKING

The customer must contractually guarantee the method of shipping the dispenser. If transport is arranged by PIUSI S.p.A., the latter must transport the product to an agreed-upon location. The dispenser has sufficient knowledge of handling and transport methods. If transport is otherwise arranged by the customer, the dispenser will ensure professional loading. However, the dispenser is not responsible for the method of transport. In general, please note that the dispenser must be transported properly packaged and always secured to the frame. The dispenser must be secured to the transport vehicle in such a way as to prevent damage (to the finish or paintwork), shifting, and tipping over. All handling and transport operations must be performed exclusively in a vertical position. The dispenser must not be placed on its covers.

WARNING	**Only forklifts may be used during handling. If other handling equipment is used, PIUSI S.p.A. is not liable for any resulting damage.**

3.2.1. HANDLING OF THE DISPENSER

The following rules must be observed during loading, unloading, and installation of the dispenser.

- Use a forklift to move the fuel dispenser securely fastened to the wooden pallet. Follow the safety guidelines provided by the forklift manufacturer.

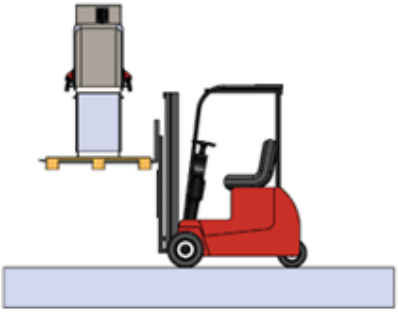

Figure 10 – Use of a forklift during loading and unloading operations

- When unloading and loading the fuel dispenser from or onto the transport vehicle, use the direction from the side of the vehicle. Loading from the rear of the vehicle is dangerous and may damage the vehicle, the support, and injure people (see figure below).

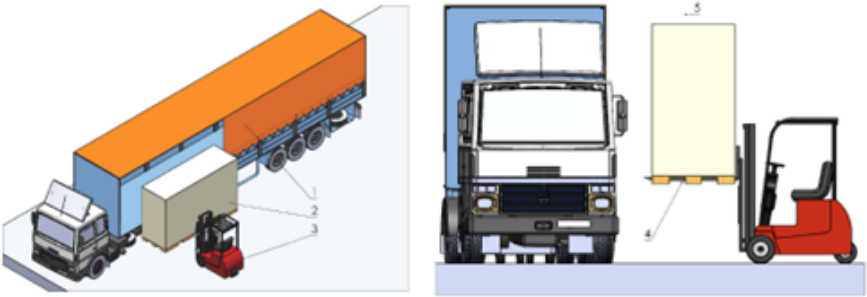

Figure 11 – Permitted direction for loading and unloading the dispenser
(1-transport vehicle, 2-dispenser on pallet, 3-forklift,
4-wooden pallet, 5-permitted direction for loading and unloading)

3.3. POSITION OF THE DISPENSER

3.3.1. GENERAL

The installation area for the dispenser must be structurally protected to prevent, as much as possible, damage to the dispenser by an approaching vehicle and the resulting release of liquid into the atmosphere. It is therefore recommended to:

- Ensure access to the refueling location in a straight line
- Install the dispenser on a raised platform with the following parameters
  - platform elevation relative to the surrounding road of at least 150 mm
  - platform width of at least 1,500 mm / shelter length of at least 4,000 mm
- If the dispenser is installed directly on the ground without a platform, it must be protected from vehicle collisions using a tubular guard with the following dimensions:
  - guard width at least 1,500 mm (platform width) / length 2,000 mm
  - height of the upper edge of the tube above the road at least 450 mm

Example of dispenser location at a service station – see Figure 12.
If there is a fixed obstacle (column, wall, etc.) near the dispenser, the minimum clearance distance between the dispenser and such obstacles must be maintained to ensure safe operation and maintenance – see Figure 12

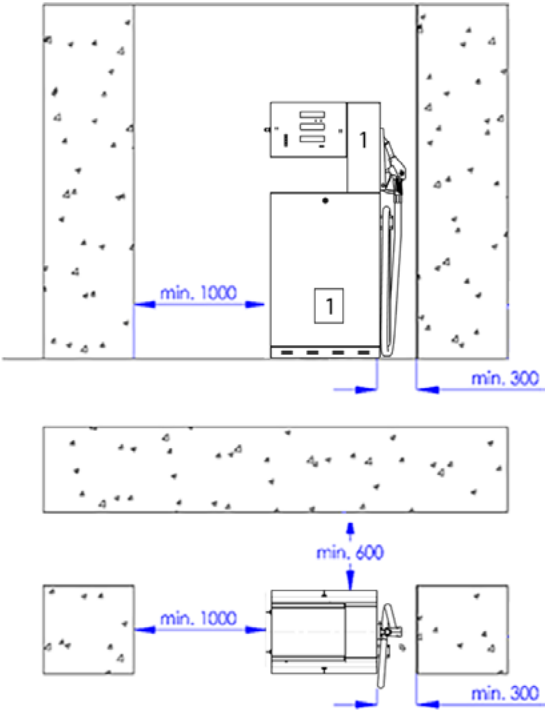

Figure 12 - Recommended minimum distance between the dispenser and a fixed obstacle

3.3.2. INSTALLATION OF DISPENSERS WITH RESPECT TO HAZARDOUS AREAS

Before installing the dispenser at the fueling station, you must take into account the hazardous areas where the dispenser is installed

Hazardous areas (zones, areas at risk of explosion) are determined in accordance with standard EN 60079-10.

For liquid fuel dispensers such as Diesel / Biodiesel up to B100 / HVO / XTL, dispensing zones are also regulated by standard EN 13617-1.

The zone diagrams created by the dispenser are part of the dispenser manufacturer's mandatory documentation.

The zone diagram must define the spatial distribution of hazardous areas inside and outside the dispenser—see the example in the figure below, where hazardous zone 2 (simply hatched) extends up to a distance of 20 cm vertically and 5 cm horizontally from the outline of the dispenser.

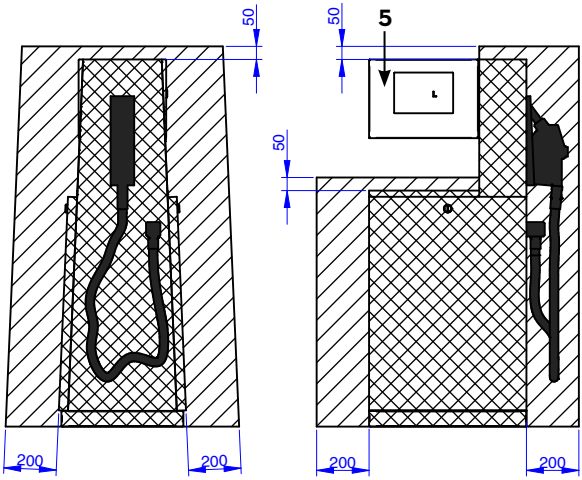

Figure 13 – Example of a drawing of the hazard zones for the SELF SERVICE HD dispenser according to EN 13617-1 (5 - non-explosive area)

3.3.3. DISTANCE OF THE DISPENSER FROM A TANK

The manufacturer recommends that the maximum distance of the dispensers from the storage tanks be 50 meters and the suction height up to 5.5 meters.
Under other conditions, the suction capacity of dispensers equipped with pumps may be compromised, resulting in reduced pumping performance (nominal flow rate) or increased noise levels from the dispenser.
All technical requirements for the fueling station must be addressed in a professionally designed and approved fueling station plan, developed in consultation with the dispenser manufacturer.

3.3.4. TYPE OF LIQUID FUEL TANK

Dispensers for pumping liquid fuels (DIESEL, BIODIESEL up to B100, HVO/XTL) can be connected to both underground and above-ground storage tanks.

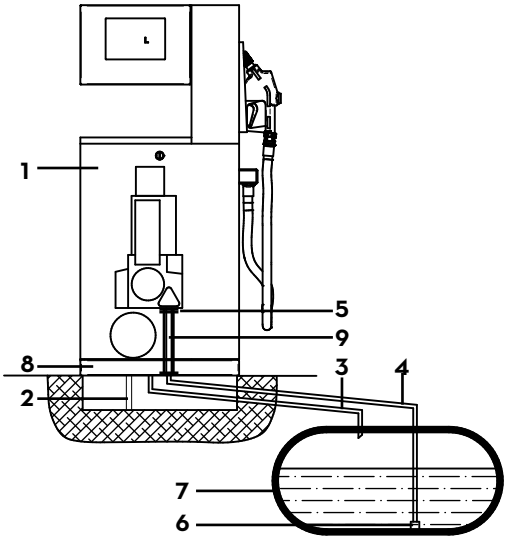

Figure 14 - Example of connecting a dispenser with suction pumps to an underground tank

Legend:
1. Dispenser,
2. Power supply and data cables,
3. Vapor return line (recovery),
4. Fuel suction line,
5. Check valve at pump inlet,
6. Suction strainer (without check valve),
7. Underground tank,
8. Drip pan with dispenser base frame,
9. Fitting (corrugated) with flange

CAUTION

If the dispenser is connected to an underground storage tank, a backflow prevention valve must be included in the suction line to ensure that, when the dispenser is idle and not pumping, the fuel column does not spontaneously break and air is not drawn in after pumping begins. It is not necessary to install a separate check valve if the suction basket is already equipped with a check valve (see Figure 15)

CAUTION

If the dispenser is connected to an above-ground storage tank, a safety (relief) valve must be included in the suction line for safety reasons to prevent the product from flowing out of the tank by gravity in the event of a malfunction. The valve also serves to relieve excess pressure in the suction line back into the storage tank. The OPW 199ASV valve (anti-siphon valve) is recommended. The valve type must be selected based on the difference between the maximum fuel level in the storage tank and the lowest point of the fuel line. A shut-off and drain valve must be installed at the lowest point of the piping and must be closed by the fueling station operator whenever the dispenser is not in operation. In the absence of these valves, an uncontrolled fuel spill may occur in the event of leaks in the piping system (see Fig. 15).

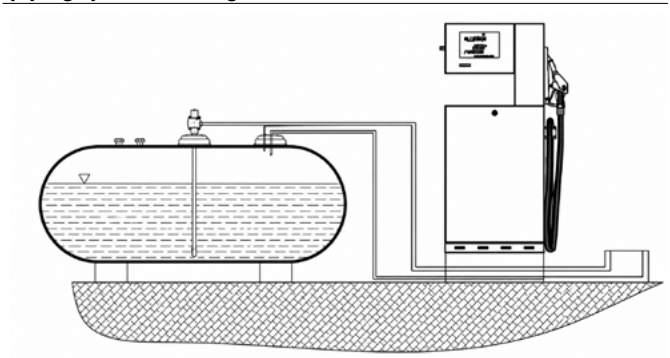

Figure 15 - Example of connecting a dispenser with suction pumps to an above-ground tank

NOTICE

Above-ground storage tank.
The dispenser pump assembly is designed with a separator permanently open to the air in the vent chamber formed by the space within the pump assembly body and the space in the pump assembly cover. There is a hole in the top of the cover with an integrated DN6 fitting for connecting the air vent pipe. To prevent overfilling of the vent chamber of the pump assembly and the leakage of fluid inside the dispenser and subsequently into the surrounding environment in the event of a leak or failure of the check valve when the dispenser is out of service, the outlet of the pump assembly separator must be connected to the storage tank. This connection can be made using a Ø 10 x 1 (DN8) tube connected to the DN8 fitting. The pipe fitting is screwed through the gasket into the M12x1.5 hole at the top of the monoblock cover. The pipe outlet must be inserted into the storage tank cover using the DN8 elbow fitting.

3.3.5. PIPING DESIGN

The dispenser manufacturer recommends standard piping, with a separate line running from each pump in the dispenser to the corresponding fuel tank.

NOTE

There is also a so-called "backbone" piping system, in which multiple dispensers (pumps) are connected to a single supply line coming from the storage tank. The dispenser manufacturer does not recommend this backbone piping system due to the potential instability of fuel suction from the storage tanks. If the designer opts for the backbone piping system, the dispenser manufacturer requires the installation of check valves in the suction line to functionally isolate the dispensers from one another.

3.3.6. SUCTION SYSTEM

In the case of a suction system, the suction pump is located directly in the dispenser. The pump is connected to the storage tank via a suction line, which draws fuel from the storage tank into the vehicle's fuel tank.

NOTICE

The dispensers are designed to be connected to a 44.5 x 2.5 mm fuel suction line terminated with a PN6 DN32 (G1/4") oval flange in accordance with EN 13 365. If a different type of inlet pipe and flange is used, this must be discussed with the dispenser manufacturer. The dispenser manufacturer is not responsible for problems associated with leaks in the inlet pipe and an improper connection to the suction pump.

3.4. MECHANICAL MOUNTING OF THE DISPENSER

The dispensers are secured to special foundation frames using anchor bolts supplied with the dispenser. The dispenser foundation frame is not included as standard equipment with the dispenser but can be ordered separately. The foundation frame is set in concrete within the safety island; then the front and rear covers of the dispenser are removed, and the dispenser is positioned on the foundation frame and secured with anchor bolts.

CAUTION

Where required by local regulations, for safety and environmental protection reasons, a drip pan is installed beneath the dispenser. It prevents fuel from leaking into the ground due to possible leaks from the hydraulic system. The spilled liquid appears at a defined point on the outside of the dispenser, where the operator can quickly locate it and repair the leak in the hydraulic system.

The dispenser is then connected to the suction line with a corrugated hose (suction fitting) included with the dispenser. Section . 7.2 shows the foundation frames and foundation plans for all dispenser types, indicating the position of the suction line and the line for venting DIESEL, BIODIESEL up to B100, and HVO/XTL vapors from the dispensers.

3.4.1. INSTALLATION OF THE COLLECTION TRAY

We recommend following the procedure below:

1. Remove the side covers (doors) of the dispenser's hydraulic cabinet
2. Disconnect
   - all cables coming from the distribution boxes (if installed),
   - all suction hoses from the pump units (if installed), and
   - the hose from the vapor recovery outlet

The space between the hydraulic system and the dispenser base must be clear.

3. Place the sump plate (1) on the dispenser base frame and move the panel into position so that the mounting hole on the sump plate (2) aligns with the hole on the dispenser base, then secure the sump plate in place with the plastic pin (3)

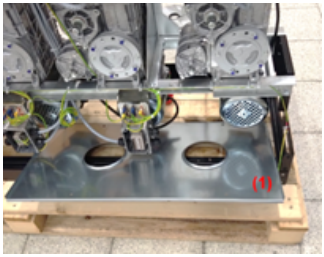

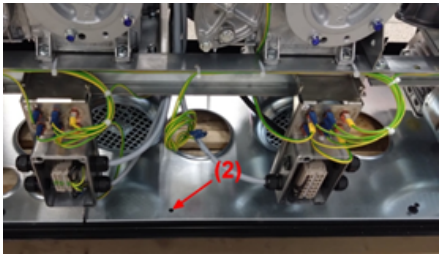

4. Feed the cables through the small holes: the power cable through hole (6) and the data cable through hole (7), then connect the cables to the appropriate junction boxes.

5. Connect the vapor recovery hose to the outlet pipe through hole (5)
6. Connect the suction hose (8) to the pump unit and the inlet pipe through hole (4)

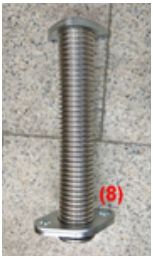

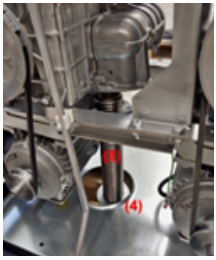

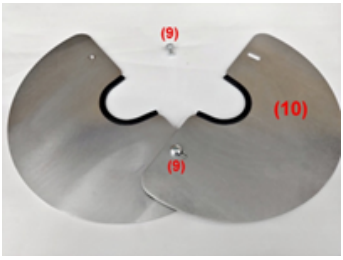

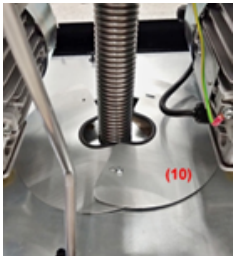

7. Loosen the two screws (9) on the discharge elbow (10), and position the discharge elbow on the suction hose (8)
8. Tighten the screws (9) on the drip ring (10)

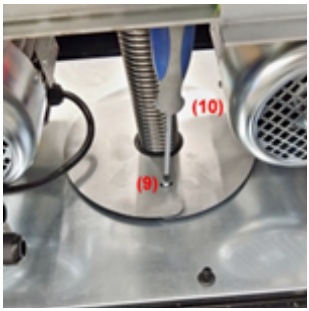

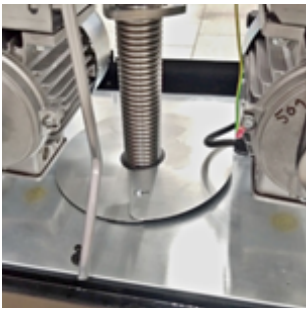

9. Install the side covers (doors) of the dispenser's hydraulic cabinet

3.5. ELECTRICAL CONNECTION OF THE DISPENSER

For the electrical connection of PIUSI SELF SERVICE HD dispensers, protection against contact voltage must be provided in accordance with international standard IEC 60364-4-41:2017, and the applicable electrical cables must therefore be routed to each dispenser.

All dispensers at the service station must be interconnected by a grounding cable and connected to the grounding system. A yellow-green cable with a cross-section of at least 4 mm· or a special grounding clamp may be used as the grounding cable. The ground wire must be connected to a central ground terminal on the dispenser located on the foundation (M10 bolt) marked with a ground symbol.

CAUTION

Only cables that comply with the requirements of European standard EN 13617-1:2012 may be used as power cables.

NOTE

To facilitate installation (termination of cables in a distribution box), the ends of all cables entering the dispenser must be of sufficient length, each at least 3 m from the ground.

In terms of voltage and function, cables can be divided into power cables and signal cables.

Power cables:

- power supply to the electric motors of the pump and vacuum pump located in the dispenser
- powering meters, switching circuits, and heating
- Switching of pumps located outside the dispenser (pressure version of the dispenser/module)

Signal cables:

- Communication line
- additional service and safety lines (STOP signal, pulse outputs, motor lockout, level indicators, etc.)

3.5.1. POWER SUPPLY FOR THE PUMP'S ELECTRIC MOTORS IN THE DISPENSER

Electric motors for pumps for all types of dispensers are supplied via a 4-wire HO5VV5-F 4x1.5 cable (see Table 6), which is powered from the main electrical panel in the booth to each dispenser and terminates at the power supply box.
The cable is connected to the fuses and the circuit breaker in the electrical panel. The switching of individual pump motors and vacuum pump motors is performed via contactors inside the dispenser.
All PIUSI SELF SERVICE HD dispensers for diesel dispensing in the suction version are equipped with contactors, and each motor is protected by a thermal cut-out in the dispenser. The pump motors are started in such a way that at any given time, no more than two pump motors are connected to the power cable.

Wire identification in the HO5VV5-F 4x1.5 cable		
Identification	**color**	**Description**
L1	**black 1**	**phase 1**
L2	**black 2**	**phase 2**
L3	**black 3**	**Step 3**
PE	**yellow-green**	**protective conductor**

Table 6 – Wire identification in the power cable for the pump's electric motors

NOTICE

We recommend using a special circuit breaker, type PKZM O-10 by Moeller Klöckner, to terminate the 3x400V power cable in the electrical panel. This circuit breaker acts as a switch and includes both a thermal fuse and a short-circuit fuse. After installation in the electrical panel door, this circuit breaker can be integrated with a control head (IP65) with an extended shaft, type RH-PKZO.

NOTE

The DIL EEM-10 and DIL EM-10-GI motor contactors with thermal protection, types ZE-2.4 and ZE-0.6, from Moeller Klöckner, or the PKZM O-0.4 motor circuit breakers from the same manufacturer, are used to start the pump motors in the distribution units. (Figure 16)

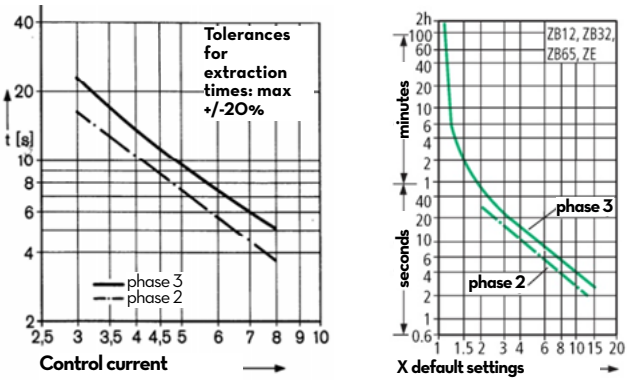

Figure 16 – Access features of the ZE-type motor current protection

Electric motor parameters
Table 7 shows the basic parameters of the electric motor used in PIUSI SELF SERVICE HD dispensers.

Pump electric motor
V80 TL 4P (RAEL)
Asynchronous motor
230/400 V; 50 Hz
Current 2.2 A
Power 0.75 kW
1410 rpm
Ia/In = 4.4
IP 55
T3
cos φ = 0.8
Ex II 2G Ex db IIB T3 Gb
EPT 16 ATEX 2476X

Table 7 – Electric Motor Parameters

NOTICE **When the electric motor is connected, check that the direction of rotation is correct! The correct direction of rotation is indicated by the arrow on the pump pulley; see the figure above.**

3.5.2. POWER SUPPLY TO THE ELECTRONIC METER AND OUTPUT LINE SWITCHING COMPONENTS

The meter and switching circuits are powered via a 3-wire power cable HO5VV5-F 3x1.5 (see Table 8), or, if the dispenser is equipped with heating, via a 5-wire power cable HO5VV5-F 5x1.5 (see Table 9). The power cable is always routed from the main electrical panel in the cab to the first hydraulic module of the dispenser in the power distribution box. From the distribution box, the power is routed to the dispenser's electronic head, where it supplies a stabilized power source to the electronic meter, the switching elements, and any additional heating elements.

Wire identification in the HO5VV5-F 3x1.5 cable		
Identification	**Color**	**Description**
L	Black	phase
N	blue	neutral wire
PE	yellow-green	protective conductor

Table 8 – Wire identification in the power cable for the meter and switching elements

Wire identification in the HO5VV5-F 5x1.5 cable		
Identification	**color**	**Description**
Ls	Black	phase
Ns	blue	neutral wire
Lt	brown	heating phase
Nt	blue	neutral wire
PE	yellow-green	protective conductor

Table 9 – Wire Identification in the Power Cable for the Meter, Switching Components, and Heating

From the dispenser, the power supply to the meter is routed to the main electrical panel, where it is connected via the 230 V/6 A circuit breaker to a common bus for all dispensers. From this point, the power supply for all dispensers is routed to the stabilized backup power source, which, in the event of a power outage, will supply power to the dispenser's meter for 3–5 minutes.

RECOMMENDATION

To ensure trouble-free operation of the dispensers, the dispenser manufacturer recommends supplementing the dispenser's stabilized power supply with a UPS (uninterruptible power supply). Power outages, severe interference, or voltage fluctuations during voltage spikes (especially during the winter season) are very common occurrences in the electrical grid. All of these issues can be eliminated by using a suitable backup UPS. There are essentially two types of backup power supplies for dispensers: line-interactive UPSs and online UPSs. For gas stations connected to a stable power grid (without voltage fluctuations or interference), a line-interactive UPS is sufficient. In other cases, an online UPS must be used. Interference, voltage fluctuations, or power outages can cause frequent dispenser lockups, communication errors between the computer and the dispenser, computer failures (data loss), etc.

3.5.3. SIGNAL OUTPUT LINES

Service lines are used for special purposes. These lines are not necessary for the immediate operation of the dispenser, but are also used in cases where it is necessary to remotely control certain functions of the dispenser or transmit certain signals from the dispenser. Always consult PIUSI technicians regarding the need to install service lines. For service lines, we recommend using HO5VVC4V5-K (0.5 mm·) multi-strand shielded cables.

3.5.4. CABLE SPECIFICATIONS

For installations, it is necessary to use cables resistant to common chemicals and oils, with sufficient thermal and mechanical resistance. These conditions are met, for example, by the harmonized HO5VV5-F and HO5VVC4V5-K cables. The main characteristics of the cables are shown in Table 10.

Cable type	Function	Number of wires	DAnom [mm]
HO5VV5-F 4x1.5	Motor power supply	4	8.2 - 10.2
HO5VV5-F 7x1.0	pump switching	7	9.5 - 11.8
HO5VV5-F 3x1.5	meter power supply, pump switching module, safety line	3	7.4 - 9.4
HO5VV5-F 5x1.5	power supply for meter with heating	5	9.1 - 11.4
HO5VVC4V5-K 5x0.5	data line	5	10.1
HO5VV5-F 2x0.5	Dispenser collective fault signal	2	5.9
HO5VV5-F 5x1.5	pressure section valve control	5	9.1 - 11.4

Table 10 - Cable Specifications

NOTICE

M20 x 1.5 and M25 x 1.5 cable glands in explosion-proof versions with Ex II 2G Ex e II and IP65 protection are used in the dispenser distribution boxes. These cable glands have a cable diameter range (Danom) between 7.0 mm and 13.0 mm (M20) and between 11.0 mm and 17.0 mm (M25). It is prohibited to use cables with diameters outside the range permitted for the cable glands!

NOTICE

Surge voltages caused by lightning strikes up to several kilometers away or by any industrial activity can occur in any line. The intensity of the surges generated by lightning induction is sufficient to completely damage electrical equipment. For these reasons, surge protection is used to divert the energy of the surge impulse to the ground wire, thereby protecting the device. The dispenser manufacturer recommends protecting the main electrical panel (or secondary electrical panel) that powers the dispensers, electronic devices (computers, payment terminals, etc.), and data lines using surge protectors and lightning arresters. The manufacturer is not liable for damage caused by insufficient protection of cable connections!

NOTICE

NOTICE To ensure trouble-free operation of the dispensers, signal cables must always be kept separate from power cables. When power cables are located near signal cables, interference and unwanted parasitic phenomena occur, which can cause control problems with the dispensers or even the destruction of the electronic devices in the dispensers and the booth. Therefore, any crossing or shared routing (in a single cable run) of signal and power cables must be avoided. This problem can be solved by providing the power and signal cables with their own “channels” (cabinets, metal conduits). The manufacturer is not liable for damage caused by improperly made cable connections!

4. DISPENSER SETUP AND BASIC FUNCTIONS

The dispenser is configured via a series of settings that allow you to control the dispenser's operational parameters and completely modify its mode and behavior in various situations. Depending on the type of electronic meter installed, the parameter values can be viewed and modified using the IR (infrared) remote control.
Table 11 describes the basic parameters of all electronic meters used in PIUSI SELF SERVICE HD dispensers.

Meter Type	**PDEX5**
Year/month of initial installation	5/2018
Use	all types of dispensers
OIML verification	R117
MID evaluation certificate	Yes
Software validation (WELMEC 7.2)	Yes
Parameter setting method	PDERT-XO remote control, manager Keypad with 12 preset keys
Displays program version + CRC	after power-on or in parameter MO-PO5-1 (version) MO-PO5-2 (CRC)
Protection of metrological parameters	via password + switch
Communication protocol type	PDE (RS485)

Table 11 - Types of PIUSI SELF SERVICE HD electronic meters

The method for configuring the dispenser varies depending on the meter used in the dispenser head. The following section describes the meter's functions and basic settings.

5. OPERATION

5.1. INSTRUCTIONS FOR SAFE OPERATION

Dispensers are complex devices that must perform a series of demanding functions. Therefore, before commissioning, it is necessary to clean the storage tanks and piping systems and verify the cleanliness of the pumped fluid.
Before commissioning, it is necessary to inspect the wiring and check the correctness of the connections in order to prevent any injuries from electric shock and ensure explosion safety.

No smoking

Do not use open flames

WARNING

The dispensers are hygienically safe for the customer and the operator. It is recommended to protect your hands, for example with eco-friendly gloves, during routine maintenance and while dispensing.
In case of skin contact, wash the affected area as soon as possible with soap and water. In case of contact with the eyes, etc., consult a doctor. During dispensing, avoid inhaling vapors from the pumped fluid.

CAUTION

- **Smoking and the use of open flames are prohibited in the immediate vicinity of the dispenser.**
- **The smoking ban also applies to passengers inside the vehicle.**
- **It is prohibited to refuel the vehicle's tank while the engine is running.**
- **It is necessary to comply with the established terms for performing regular checks and inspections of all installed technical devices. Do not allow persons without appropriate professional qualifications to tamper with the installed equipment**

CAUTION

- **The operator must not perform any repairs on the device or modify the settings of the safety devices. Periodic maintenance and servicing may only be performed by an authorized service provider.**
- **The operator must keep the device in proper and safe condition, immediately inform the service organization of any defects or malfunctions during operation, and immediately take the device out of service if there is a risk of failure.**

5.2. PUTTING THE DISPENSER INTO OPERATION

The fuel dispensers are turned on/off at the main electrical panel of the fueling station, where the power supply is located.
Each dispenser has two power supply points in the main electrical panel:

- Power to the electric motors of the pumps,
- Power supply to the dispenser's electronic meter, switching circuits, and heating circuits

Both power outlets are protected by circuit breakers that allow the dispenser to be turned on and off.

RECOMMENDATION

We recommend turning on the dispenser as follows:

- Turn on the backup UPS located in the cabinet (the green LED on the UPS will light up)
- Turn on the 230 V circuit breaker for the stabilized power supply to the dispenser meter (all display segments are automatically tested and the latest values provided are displayed)
- Turn on the 3x400 V power switch for the electric motors of the pumps and vacuum pumps (if installed).

When the PDEX5 meter is turned on, the following processes occur:

Display unit test.
The display backlight turns on, and then all display segments (eight) are displayed for approximately 1 second.

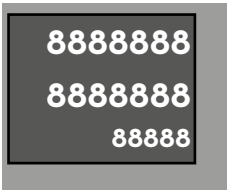

Delay upon meter startup.
Time required to start up the multimedia display. During the delay, the displays show the filling point to which the display is connected and the time remaining in seconds until the dispenser's electronic counter is activated.
The delay duration (15) can be set via the meter parameter; by default, there is no delay.
The positions of switches SW1-1, SW1-2, SW1-3, and SW1-4 are displayed on the center line (1=ON; 0=OFF).
If switch SW1-1 is in position 1, the selected metrological parameters cannot be set on the meter.

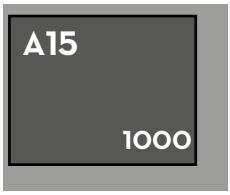

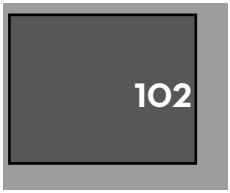

Processor unit test.
A ten-second test in which all functions and the memory of the processing unit are checked.
During the test, the side of the meter to which the display is connected is shown, and:

- version of the metrologically relevant part of the program (VER 1.02),
- checksum of the metrologically relevant part of the program (dbd2 2FA4).
- type of processor board PDE5S or PDE5L

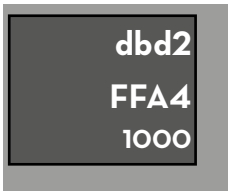

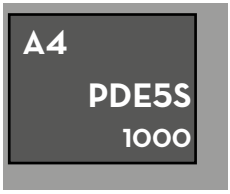

Setting the meter status before turning it off.
The information that appeared on the display before the meter was last turned off is shown.
If the meter was operating in manual mode, pumping can start immediately after the gun is raised.
If the meter was operating in automatic mode, it waits for communication with the control computer to be established and, if necessary, for the transaction to be completed, if it was not completed properly before shutdown.

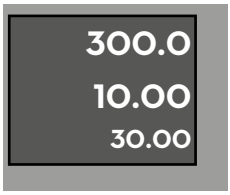

The dispenser is now ready for fuel dispensing.

5.3. OPERATION OF THE DISPENSER

NOTICE

The operator is responsible for the operation of the service station and is required to monitor fuel dispensing; if a customer performs unauthorized operations at the self-service pumps, the operator must instruct the customer on proper use. The operator is also required to mark the hazardous area of the service station with warning symbols (no smoking, no open flames, direction of approach to the dispenser, etc.)
The service station's operating instructions must be freely accessible to customers for any information regarding fundamental obligations.

5.3.1. FUEL DISPENSING

The dispenser is started by lifting the dispensing nozzle from the nozzle holder, which simultaneously resets the electronic meter data.
The pump's electric motor is then activated, and fuel can be dispensed.
The dispensing speed is controlled by the nozzle. Fueling ends by closing the nozzle (releasing the control lever) and subsequently reattaching it to the nozzle holder, which shuts off the pump's electric motor.
The dispensed quantity remains unchanged until the nozzle is lifted again.

Fuel Dispensing
The fluid measured by the meter is dispensed into the dispensing hose and into the dispensing nozzle at the end of the hose.
Self-Service HD gas stations use dispensing nozzles with a safety shutter.
Using the control lever, the flow rate can be adjusted until it stops.
In the basic version, the dispensing nozzle is equipped with a lever lock.
When the lever is released or the dispensing nozzle is removed from the tank opening, the fuel flow stops.
The shut-off function is activated when the tank is full after the sensor has detected the fluid level; the flow stops even when the control lever is pressed.
The safety feature is activated, for example, when the nozzle is not handled correctly—that is, when the outlet is tilted more than 15° upward from the horizontal plane—the flow stops even when the control lever is pressed.
After the shut-off function and the safety function, the control lever must be released to automatically return to the home position.

1.

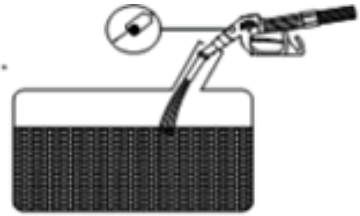

Correct position of the dispensing nozzle during dispensing
The dispensing nozzle is nearly horizontal (it was "vertical"), the ball does not block the air flow, and fuel flows.

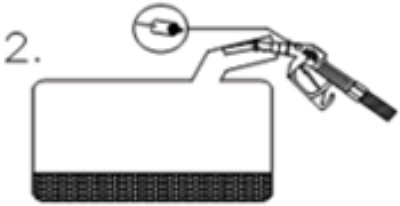	**Incorrect position of the dispensing nozzle** The dispensing nozzle is deviated from the horizontal position, the ball prevents air from passing through, and fuel does not flow
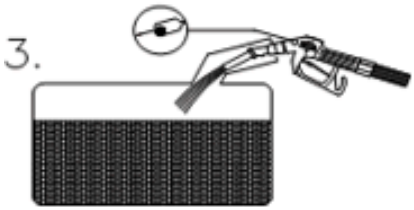	On various models of fuel tank filler doors, it is necessary to find the optimal position of the nozzle while fuel is still flowing. Flow interruption can also occur when the fuel stream from the nozzle hits the wall of the tank neck. In this case, the optimal position must be found.

Table 12 - Nozzle Positions During Dispensing

5.3.2. OPERATING MODES OF THE DISPENSER

There are two basic operating modes for the dispenser:

1. manual mode
2. automatic (remote) mode

Manual mode

is a state in which the dispenser operates independently of any remote control.

Fueling procedure:

The customer approaches the pumps and picks up the nozzle. The display resets (approximately 1.5 seconds), then the pump motor starts and the dispenser is ready for fueling.

Once the fuel has been dispensed, the customer returns the nozzle. The dispenser is immediately ready for the next transaction.

The number of liters dispensed per shift is determined by the difference between the electronic (or electromechanical) totalizers at the beginning and end of the shift.

NOTE

Immediately after dispensing is activated, the dispenser display is reset. The time between removing the nozzle, the display resetting, and the pump starting can vary significantly depending on the control system used and the service station configuration, ranging from 2 to 5 seconds.

Switching from automatic to manual mode.
By default, the dispensers are connected and configured to operate as intended at the service station; that is, if the service station is equipped with a control system, the dispensers will be set to automatic mode; if the service station lacks a control system, the dispensers will be set to manual mode by default.
If you need to switch from automatic to manual mode, for example due to a control system failure, proceed as follows:
PDEX5 counter.
You must change the value of parameter MO-P12 (P12) from O to 3 using the IR remote control.

NOTICE

The switch from automatic to manual mode must be discussed in advance with the service technician!

5.3.3. AIR SEPARATION SENSOR (VRS1.G & ZE-2063)

According to type approval certificate TCM 141/07-4491, all pumps must be equipped with an air separation sensor.
The VRS1.The G flow sensor is mounted on the air separator of the FP-1001 pump unit.
If the volume of separated air exceeds the volume that the pump unit can safely separate, the air flow sensor is activated and, consequently, the corresponding input (BL1... r BL4) on the meter's processing unit. The meter stops dispensing (pumping) and error E51 appears on the display.

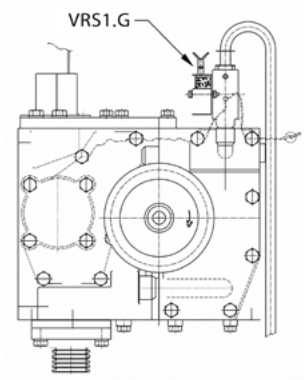

Figure 17 - FP-1001 pump unit with VRS1.G air flow sensor

The procedure for locking the dispenser and signaling an error is as follows:
A critical amount of air is drawn into the pump unit (for example, if the suction line is broken). The VRS1. The G sensor is activated and the BL input goes active, then for a test time between 1 and 50 seconds (standard 10 sec.), the controller performs the first test cycle, i.e., closes the valve as during pumping at the preselected volume (flow approx. 2-5 L/min) and monitors the state of the BL input while the pump motor is running.
If the BL input goes to the inactive state during the Ttest time, the valve opens fully and pumping continues.
If the sensor status does not change during the Ttest time and remains active, pumping is interrupted and error code E51 is displayed.
The number of "successful" cycles, i.e., cycles in which error E51 does not occur, is limited to 3 by default during a fill. After exceeding the maximum number of test cycles, the pump is stopped and error code E52 is displayed

NOTICE

In the event of errors E51/E52, check the fuel line for leaks, the suction line in the tank for leaks, and the fuel level in the tank.

5.3.4. AIR VENT

To check the air vent flow (air separation), immerse the end of the air vent tube in a small container containing fuel, the same fuel as in the tank. Start the pump in bypass mode by removing the gun from its holder and let it run for a while before releasing the lever.

- When bubbles appear consistently, this indicates that air is entering the pump or the system upstream of the pump.

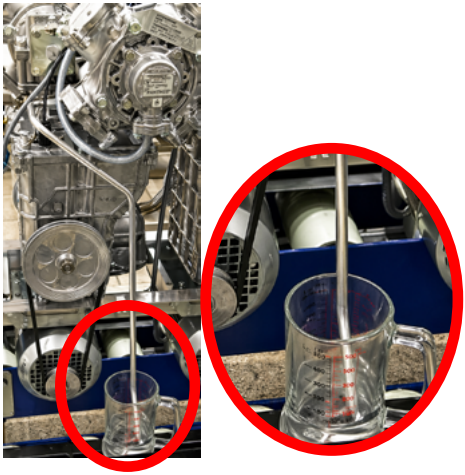

NOTICE

1. Do not submerge the tube too deeply in the container.
2. If the end of the vent tube is difficult to reach, try feeling with your hand to see if a stream of air or vapor is escaping from the vent.

5.3.5. DESCRIPTION OF THE PDEDIL V6 DISPLAY

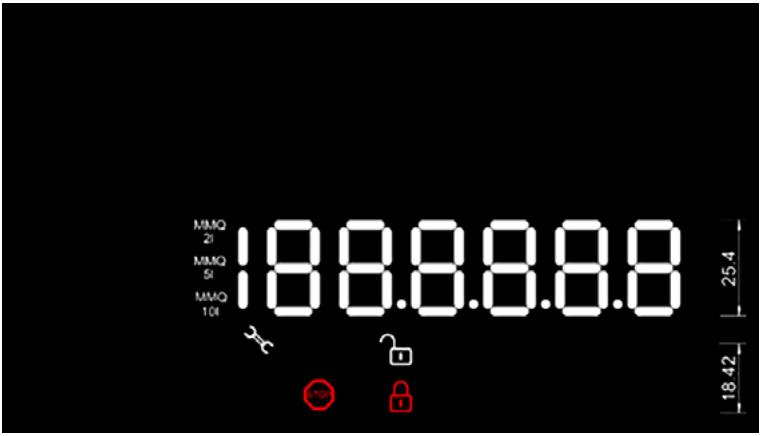

The LCD display consists of the following parts:

Display segment	Function	Note
188.8.8.8.8	Delivered volume	- for P12=O, it can display values between O and 9999.99 L - for P12=1, it can display values between O and 99999.99 L
MMQ 2l MMQ 5l MMQ 10l	Minimum measured quantity	The display is set by parameter P91 for each dispensing tube
	Dispenser status indication - released for dispensing / locked	Appears automatically when the dispenser status changes
STOP	Forced dispensing interruption signal	Appears: • after the STOP command has been received from the cab, • after the preset number has been reached • after the allowed time without dispensing has elapsed
	Fault or maintenance required indication.	- displayed for every fault indication along with the fault code (see O)

5.3.6. INTERRUPTION OF DISPENSER OPERATION

RECOMMENDATION

The manufacturer recommends deactivating the dispenser in the following order:

- Turn off the 3x400 V power switch for the electric motors of the pumps and vacuum pumps.
- Turn off the 230 V circuit breaker for the stabilized power supply to the dispenser's electronic meter.
- Turn off the backup UPS located in the booth using a switch on the rear panel (the green LED on the UPS will turn off).

After turning off the power supply to the electronics in the service station's electrical panel, the message "OFF" appears on the display and the display lighting turns off. The last data remains displayed for at least 15 minutes after the power is disconnected. After this period has elapsed and the display has "cleared," the display status is saved in the meter's memory and will be displayed once power is restored—see the previous section

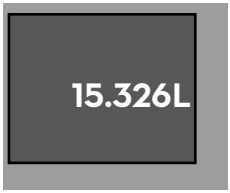

The dispenser is now out of service.

6. MAINTENANCE AND SERVICE

6.1. BASIC PRINCIPLES OF DISPENSER MAINTENANCE OF THE DISPENSER

- Keep all functional units of the dispenser clean so that any potential unexpected defects can be easily identified and quickly eliminated.
- Check all connections continuously; in case of fuel leaks, tighten and reinforce the joints.
- Check and, if necessary, adjust the tension of the V-belt with the motor bracket.
- Check and, if necessary, tighten the screws securing the electric motor to the bracket.
- Inspect the condition of the dispensing nozzle and decide whether to repair or replace it, if necessary, based on the type and extent of the defect.
- Regularly check the condition of the dispensing hoses. If there is mechanical damage to the dispensing hose, replace it immediately.
- Check the operation of the door locks and the nozzle latching mechanism.
- Clean the exterior of the dispenser, paying particular attention to cleaning the counter window.
- Regularly remove sludge, water, and other impurities from the tanks (fuel tanks) using a sludge pump.

See Figure 18 and Figure 19

CAUTION **Always turn off the power supply and take reliable measures to prevent it from being reconnected before performing any maintenance on mechanical, hydraulic, or electrical parts.**

CAUTION **Do not remove the dispenser covers during operation!**

Figure 18 - Uncovered dispenser, side B

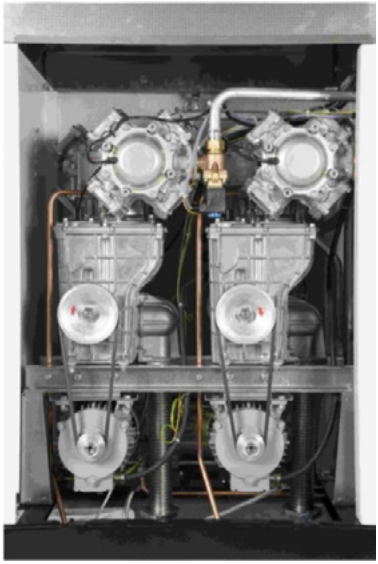

Figure 19 - Uncovered dispenser, side A

CAUTION

The belt between the motor and the pump (e.g., vacuum suction pump) is anti-static and must not be replaced with another type!

CAUTION

Do not open the distribution box cover if the dispenser is energized!

THE DISPENSER OPERATOR IS REQUIRED TO:

- Appoint an employee responsible for the operation and technical condition of the dispenser.
- Ensure inspections, testing, repairs, and maintenance are performed professionally.
- Record documents and maintain records related to operation.

6.1.1. MAINTENANCE OF DISPENSER COVERS

The dispenser covers ("body parts") made of painted steel require regular maintenance. Pay particular attention to the maintenance of these parts, especially during the winter season when, due to the activity of aerosols from chlorinated agents created by road salt, the paint may be permanently damaged.

Recommended maintenance for painted covers:

- Wash with warm water at least twice a month (depending on the level of dirt).
- At least once a month (or if soiled with fuel), wash with detergent; thoroughly clean the covers of salt, dust, and grease residues (depending on the level of dirt) + restore the protective coating on the design parts (car care products).

CAUTION

It is prohibited to clean the painted parts of the dispenser with chlorine-based products!!!
Chlorine-containing products (disinfectants such as SAVO) cause corrosion of the dispenser's metal parts.

6.1.2. METER CALIBRATION

On PIUSI SELF SERVICE HD dispensers equipped with flow meters, three types of meter calibration can be performed:

1. Mechanical Calibration of the Meter
2. Manual electronic meter calibration
3. Automatic electronic calibration (PDEX5 meter only)

CAUTION

Meter calibration may only be performed by an authorized person, namely a service technician or a designated metrologist. During meter calibration, the seals and metrological marks are broken.

Mechanical calibration of the meter (1) is performed only on FM-1007 piston-type meters, directly on the meter by turning the calibration wheel A (see Figure 17), which allows for mechanical adjustment of the meter's cycle volume. If the meter is precisely adjusted, one revolution of the meter shaft corresponds exactly to 0.5 L of fuel dispensed and 50 pulses sent to the computer by the pulse generator (pulser) connected to the meter shaft. By turning the calibration wheel clockwise or counterclockwise, the meter's accuracy can be corrected within a range of +/-1.3% in increments corresponding to a variation of 0.04%.

NOTE

The fuel calibration wheel (FM-1007) can be rotated through 17 holes in both directions. The accuracy difference between two adjacent holes is +/-0**.08%. The wheel can also be locked in a position between the holes, in which case the accuracy difference is** +/-0**.04%.**

The mechanical calibration procedure for the meter is as follows:

1. A precise dispensing is performed into a calibration container (with a capacity, for example, of 20 L, 50 L, 100 L).

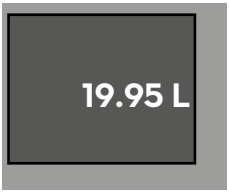

2. Depending on the display and the calibration tables, the meter's calibration wheel is turned clockwise (volume down) or counterclockwise (volume up) by the appropriate number of notches; for example, when using a 20-liter calibration tank, the display shows 19.95 liters, which according to the table (see Table 13 below) is outside the tolerance of -0.25%. It is necessary to turn the calibration wheel 3 notches clockwise, i.e., reduce the capacity of the meter chamber to increase the number of shaft revolutions and thus also the pulses.

3. The calibration wheel is secured with a pin, and a new control measurement is performed.
4. Once the meter adjustment is complete, the calibration wheel is secured and the meter is sealed (see Figure 20, positions B, C, D, E).

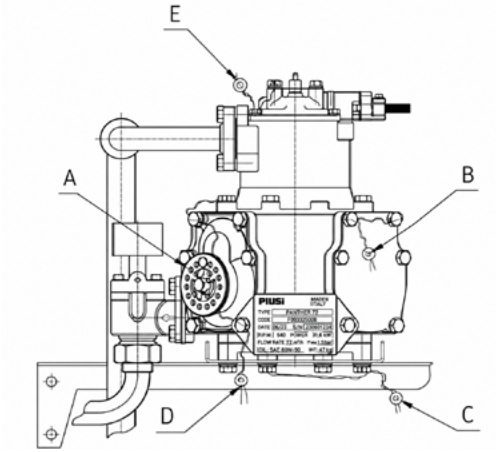

Figure 20 – Piston-type fuel meters (type FM-1007) A=calibration wheel

Manual electronic calibration of the meter is performed on all meter types by manually adjusting the meter parameter:

For the PDEX5 meter, by changing the value of the correction factor in parameter M6-P09 (the default value of the parameter is 10000, which corresponds to a correction factor of 1.0000)

The parameter value can only be changed after setting switch SW1-1 to the OFF position and using the yellow PDERT-XS service remote control (see figure on the right). Switch SW1-1 is protected by a cover and a seal.

The procedure for manual electronic calibration of the meter is as follows:

1. Accurate fuel dispensing is performed into a calibrated tank (e.g., 20 L)

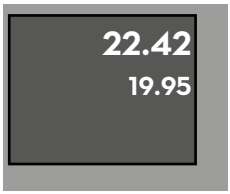

2. Based on the value shown on the dispenser display, the correct parameter value is read from the calibration table (see Table 13).
3. For example, when filling a 20-liter calibrated container, the display shows 19.95 L, which is outside the -0.25% tolerance, and the correct value for parameter M6-P09 is 10025 (for the PDEX5 meter).

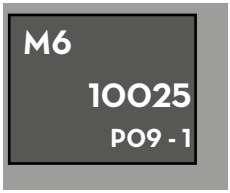

PDEX5

4. The cover of the processing unit is removed and switch SW1-1 is set to the OFF position.

Using the PDERT-5S service remote control, access the meter's service mode by entering the service password. The parameter value is changed, and the service mode is exited.

5. A new, accurate fuel dispensing is performed into the calibrated container (20 L).
6. If everything is OK, i.e., the volume shown on the display matches the volume of the calibration container, switch SW1-1 is set to the ON position, the processing unit is covered with a lid and sealed.

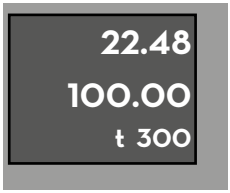

Indicated quantity	Quantity deviation	Error %	Correction factor PDEX5	PDEX5 M6-P09	Pulse correction PDEX/liter	Pulse phase correction TBELTx/liter
19,75	-0,25	-1,25	1,0125	10125	9875	395
19,76	-0,24	-1,2	1,012	10120	9880	
19,77	-0,23	-1,15	1,0115	10115	9885	
19,78	-0,22	-1,1	1,011	10110	9890	
19,79	121	-1,05	1,0105	10105	9895	
19,8	-0,2	-1	1,01	10100	9900	396
19,81	41,19	-0,95	1,0095	10095	9905	
19,82	-0,18	-0,9	1,009	10090	9910	
19,83	-0,17	-0,85	1,0085	10085	9915	
19,84	-0,16	-0,8	1,008	10080	9920	
19,85	-0,15	-0,75	1,0075	10075	9925	397
19,86	-0,14	-0,7	1,007	10070	9930	
19,87	-0,13	-0,65	1,0065	10065	9935	
19,88	-0,12	-0,6	1,006	10060	9940	
19,89	-0,11	-0,55	1,0055	10055	9945	
19,9	-0,1	-0,5	1,005	10050	9950	398
19,91	-0,09	-0,45	1,0045	10045	9955	
19,92	-0,08	-0,4	1,004	10040	9960	
19,93	-0,07	-0,35	1,0035	10035	9965	
19,94	-0,06	-0,3	1,003	10030	9970	
19,95	**-0,05**	**-0,25**	**1,0025**	**10025**	**9975**	**399**
19,96	-0,04	-0,2	1,002	10020	9980	
19,97	-0,03	-0,15	1,0015	10015	9985	
19,98	-0,02	-0,1	1,001	10010	9990	
19,99	0),01	-0,05	1,0005	10005	9995	
20	**0**	**0**	**1**	**10000**	**10000**	**400**
20,01	0,01	0,05	0,9995	9995	10005	
20,02	0,02	0,1	0,999	9990	10010	
20,03	0,03	0,15	0,9985	9985	10015	
20,04	0,04	0,2	0,998	9980	10020	
20,05	**0,05**	**0,25**	**0,9975**	**9975**	**10025**	**401**
20,06	0,06	0,3	0,997	9970	10030	
20,07	0,07	0,35	0,9965	9965	10035	
20,08	0,08	0,4	0,996	9960	100,4	
20,09	0,09	0,45	0,9955	9955	100,45	
20,1	0,1	0,5	0,995	9950	100,5	402
20,11	0,11	0,55	0,9945	9945	100,55	
20,12	0,12	0,6	0,994	9940	100,6	
20,13	0,13	0,65	0,9935	9935	100,65	
20,14	0,14	0,7	0,993	9930	100,7	
20,15	0,15	0,75	0,9925	9925	100,75	403
20,16	0,16	0,8	0,992	9920	100,8	
20,17	0,17	0,85	0,9915	9915	100,85	
20,18	0,18	0,9	0,991	9910	100.90	
20,19	0,19	0,95	0,9905	9905	100,95	
20,2	0,2	1	0,99	9900	101	404
20,21	0,21	1,05	0,9895	9895	101,05	
20,22	0,22	1,1	0,989	9890	101,1	
20,23	0,23	1,15	0,9885	9885	101,15	
20,24	0,24	1,2	0,988	9880	101,2	
20,25	0,25	1,25	0,9875	9875	101,25	405

Table 13 - Calibration table for a 20-liter calibrated tank

The special PDEX5 meter mode (M6-P09) is used for **automatic electronic** meter calibration, in which the meter correction factor is calculated and set automatically. This also allows the dispenser to be calibrated with active volume temperature compensation.
The automatic meter calibration mode is activated by parameter M6-P15.

NOTE

For ultra-high-flow dispensers (110 L/min), where two meters are used for a single dispensing hose/nozzle, the main meter must be calibrated first when setting parameter M6-P15 = 1.
The meter does not start the auxiliary pump motor during calibration of the main meter. After calibrating the main meter, the auxiliary meter is calibrated when parameter M6-P15 = 2 is set.
The meter does not start the main pump motor during calibration of the auxiliary meter.

The procedure for automatic electronic calibration of the meter is as follows:

1. The cover of the PDEX5 meter processing unit is opened, removed, and switch SW1-1 is set to the OFF position.
2. Using the PDERT-XS service remote control, after entering the service password, enter the service level for meter configuration and change the value of parameter M6-P15 to 1 or 2, thereby activating the automatic meter calibration mode.

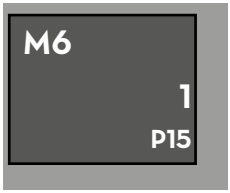

3. An accurate delivery is performed into the calibrated container. The tank volume must be 10 L, 20 L, 50 L, or 100 L.

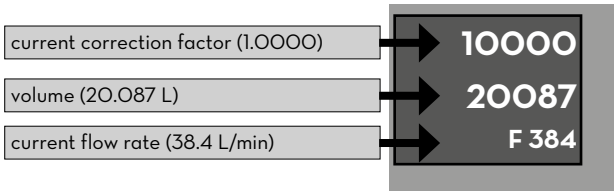

4. After returning the nozzle, "E-C" appears on the bottom line of the display, and the meter awaits confirmation to validate the measurement and calculate a new correction factor.

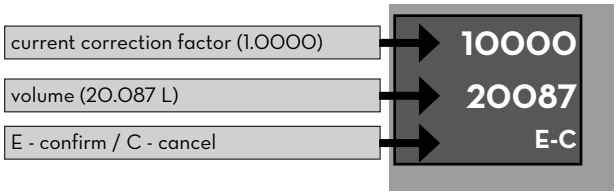

5. After pressing the <E> key, a new correction factor is automatically calculated and saved.

New correction factor value (0.9957)
volume (20.087 L)

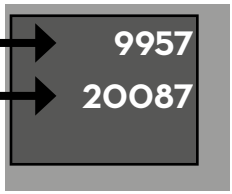

6. A new, accurate dispensing is performed into the calibrated container.

Current correction factor (0.9957)
Volume (20.000 L)
E - confirm / C - cancel

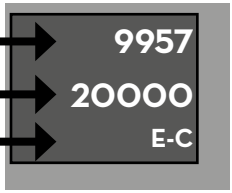

7. If the volume in the vessel does not match the displayed volume, you can repeat the calibration according to step 4).
8. If everything is OK, return to standard operating mode by setting parameter M6-P15 to O.

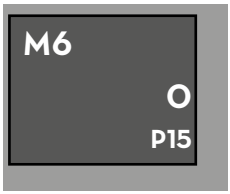

9. Switch SW1-1 is set to the ON position, the processing unit is covered with a lid and sealed.

6.2. TROUBLESHOOTING AND RESOLVING DISPENSER FAULTS

If a problem occurs, first consult the "What to do if..." table (see Table 15), which describes the most frequently asked questions from dispenser users regarding issues encountered at the service station. In the event of a dispenser malfunction, the electronic meter controlling the dispenser displays an error message in the form of a numeric code. The error codes for the various types of electronic meters are listed in section 6.2.1.

Table 15 - What to do if ...

The dispenser does not respond when the nozzle is removed, and no error message appears on the display This means that the dispenser is not powered, that the dispensing nozzle on the dispenser is not properly secured, or that the dispenser is locked by the control system. • Check that all dispensing nozzles are properly attached • Check whether the transaction at the dispenser has been paid for at the cash register • If the dispenser is in manual mode, try unlocking it with the IR remote control (press "O") • Turn the dispenser meter's power off and then back on. • Check the dispenser's power supply; when the power is on, the display should pass the test • Check the position of the circuit breaker for the dispenser's 230V single-phase power supply in the service station's main electrical panel • If the dispenser is connected to the control computer, the dispenser lockout may be linked to a control system that does not release the dispenser for pumping or locks the dispenser. Turn the dispenser power off and on again, and change the dispenser mode from automatic to manual. If the dispenser is in manual mode, there is a fault on the control computer side.
When the dispensing gun is lifted, the display resets but the pump does not start This means that the dispenser's electric motor has not started. The cause could be the power switch located in the main electrical panel or the electric motor protection being disconnected inside the dispenser. • Check the position of the three-phase power circuit breaker for the dispenser motors in the main electrical panel of the service station
The error message "E18" appears on the dispenser's display ( ). This is a dispenser error message indicating that communication between the dispenser and the control unit (computer, station controller, control console, etc.) has been interrupted. • Check that the control unit is functioning properly (meter power on, data converter power on). • Check the data cable connection
At the start of dispensing, the customer removes the dispensing nozzle and does not proceed with dispensing (for example, because they need to open the car's fuel tank). After a while, the pump shuts off. The display shows "STOP". This is a pump report indicating that dispensing was interrupted due to a pause in dispensing lasting longer than 60 seconds. Hang up the nozzle and resume fueling.

6.2.1. DISPENSER ERROR MESSAGES

In the event of a malfunction of the dispenser equipped with a PDEX5 meter, dispensing is interrupted and an error message ("E" + error code) appears on the display. Depending on the type of message, either the entire dispenser is locked (irreversible error) or only the part where the failure occurred. Important error messages are saved in the meter's memory, where they can be viewed using the Error Code History and Error Code Statistics parameters.

Table 14 - Types of Error Messages

Message type	**Pump Lockout Method**	**Method of unlocking the dispenser**
LOCK (operational lock)	Only part of the dispenser is locked	When the dispensing nozzle is released, the message disappears from the display
ALERT (warning message)	Only the defective part of the dispenser is locked The error code is saved in the history and statistics	When the cause of the error is removed, the message disappears from the display
NFAT (non-fatal error)	Only the defective part of the dispenser is locked The error code is saved in the history and statistics	When the dispensing nozzle is suspended and lifted, the message disappears from the display. You can unlock the dispenser and clear the error using a remote control or by unlocking the dispenser via the data line.
FATAL (fatal error)	The entire dispenser is locked, and the error message is saved in the history and statistics	You must remove the cause of the error and power cycle the dispenser meter.

Table 15 – Error message codes for the dispenser equipped with a PDEX5 meter

Message code	Message type	Cause of the error message	Resolving the error message
OFF	**FATAL**	Power interruption Power interruption lasting more than 3–5 cycles, t > 100 ms	You must turn off the power to the dispenser's meter for about 10 seconds and then turn it back on.
STOP	**LOCK**	Maximum supply interruption time exceeded	Hang up the gun
E1	**NFAT**	Display failure. LCD display segment failure or electromechanical display coil failure	Turn the dispenser power off and then back on. If the fault persists, contact an authorized service center.
E2	**FATAL**	Display failure. Discrepancy between the actual display number and the set number. E2-1 main display failure	You must set the correct display configuration in the meter or set the switch on the display. Turn the dispenser power off and then back on. If the fault persists, contact an authorized service center.
E5	**ALARM**	Display failure Communication error with the display or an electromechanical totalizer	Turn the dispenser power off and then back on. If the fault persists, contact an authorized service center.
E6	**NFAT**	Electromechanical totalizer failure The totalizer is not connected or is not responding	Turn the dispenser power off and then back on. If the fault persists, contact an authorized service center.
E8	**ALARM**	Low fuel level in the storage tank	After refilling the storage tank, the fault clears automatically.
E9	**FATAL**	Recurring hydraulic system leak	Check the hydraulic system for leaks. Turn the dispenser's power off and then back on. If the fault persists, contact an authorized service center.

Message code	Message type	Cause of the error message	Resolving the error message
E10	**NFAT**	Temperature sensor error	Check the temperature sensor connection. Turn the dispenser power off and then back on. If the fault persists, contact an authorized service center.
E11	**NFAT**	Invalid fuel density value	Turn the dispenser power off and then back on. If the fault persists, contact an authorized service center.
E12	**FATAL**	Temperature correction unit error The PDEINP is not connected or has an incorrect checksum	Check the PDEINP connection. Turn the dispenser's power off and then back on. If the fault persists, contact an authorized service center.
E13	**FATAL**	Program error, metrological error, or program checksum error E13-1 Non-metrological part of the program damaged E13-2 Metrological part of the program damaged	Turn the dispenser power off and then back on. If the fault persists, contact an authorized service center.
E15	**NFAT**	Maximum product flow exceeded	Check the hydraulic system. Turn the dispenser's power off and then back on. If the fault persists, contact an authorized service center.
E18	**ALARM**	Data line error Serial communication line fault, loss of communication.	Control computer not connected or communication cable not connected correctly. Check the setting of parameter P76. Check the operation of the data converter. Check the communication status using a monitor.

Message code	Message type	Cause of the error message	Resolving the error message
E20	**NFAT**	Power failure during dispensing The last dispensing operation was abnormally interrupted due to a power outage.	Check the dispenser's power supply and for interference (power source).
E21	**NFAT**	Incorrect position of switches SW1-1 and/or SW1-4	Check the position of the switches on the control unit. Switch SW1-1 must be in the ON position and switch SW1-4 in the OFF position. The switch positions are visible on the display after power-up; see section 5.2. If the fault persists, contact an authorized service center.
E22	**FATAL**	Data initialization. configuration parameter values in FRAM memory are corrupted E22-1 The CRC values of the configuration parameters do not match E22-2 A parameter value is out of range	You must set the meter parameters Contact an authorized service center.
E23	**NFAT**	Corrupted values from the last write to FRAM memory The CRC of the last fill values does not match.	Turn the dispenser power off and then back on. If the fault persists, contact an authorized service center.
E24	**FATAL**	Corrupted values of the decimal remainders of the electromechanical totalizers in FRAM memory The CRC values of the last remainders of the electromechanical totalizers do not match.	Turn the dispenser power off and then back on. If the fault persists, contact an authorized service center.
E25	**FATAL**	Damaged values of electronic totalizers in FRAM memory The CRC values of the electronic totalizers do not match.	Turn the dispenser power off and then back on. If the fault persists, contact an authorized service center.

Message code	Message type	Cause of the error message	Resolving the error message
E27	**FATAL**	Dispenser locked by the manufacturer	Enter the authorization code in parameter 16 (PDEX) Turn the dispenser power off and then back on. If the fault persists, contact an authorized service center.
E28	**NFAT**	Unauthorized service remote control An unauthorized service remote control was used to access service mode.	The service remote control ID number is outside the allowed range. Use an authorized remote control.
E29	**NFAT**	Incorrect password An incorrect password was entered to access manager or service mode.	Enter the correct password for manager or service mode. If the fault persists, contact an authorized service center.
E31	**NFAT**	Input pulse generator channel error PDEX5 - PUL1 (PDEX - 1A)	Lift and reattach the dispensing gun several times.

Message code	Message type	Cause of the error message	Resolving the error message
E32	**NFAT**	Pulse generator channel error at input PDEX5 – PUL2 (PDEX - 2A)	Lift and reattach the dispensing gun several times. Turn the dispenser power off and then back on. If the fault persists, contact an authorized service center.
E33	**NFAT**	Pulse generator channel error at input PDEX5 – PUL3 (PDEX - 3A)	
E34	**NFAT**	Pulse generator channel error at the PDEX5 – PUL4 input (PDEX - 4A)	
E35	**NFAT**	Pulse generator channel error at the PDEX5 – PUL5 entrance (PDEX - 5A/1B)	
E36	**NFAT**	Pulse generator channel error at the PDEX5 – PUL6 input (PDEX - 6A/2B)	
E37	**NFAT**	Pulse generator channel error at the PDEX5 – PUL7 input (PDEX – 7A/3B)	
E38	**NFAT**	Pulse generator channel error at the PDEX5 – PUL8 input (PDEX - 8A/4B)	
E39	**NFAT**	Pulse generator channel error at the PDEX5 – PUL9 entrance	
E40	**NFAT**	Pulse generator channel error at input PDEX5 – PUL10	

Message code	Message type	Cause of the error message	Resolving the error message
E41	**NFAT**	Connection error or internal pulse generator error at input PDEX5 - PUL1 (PDEX - 1A)	Lift and reattach the dispensing gun several times. Turn the dispenser power off and then back on. If the fault persists, contact an authorized service center.
E42	**NFAT**	Connection error or internal pulse generator error at the PDEX5 – PUL2 input (PDEX - 2A)	
E43	**NFAT**	Connection error or internal pulse generator error at input PDEX5 – PUL3 (PDEX - 3A)	
E44	**NFAT**	Connection error or internal pulse generator error at the PDEX5 – PUL4 input (PDEX - 4A)	
E45	**NFAT**	Connection error or internal pulse generator error at the PDEX5 – PUL5 entrance (PDEX - 5A/1B)	
E46	**NFAT**	Connection error or internal pulse generator error at the PDEX5 – PUL6 input (PDEX - 6A/2B)	
E47	**NFAT**	Connection error or internal pulse generator error at the PDEX5 – PUL7 input (PDEX – 7A/3B)	
E48	**NFAT**	Connection error or internal pulse generator error at the PDEX5 – PUL8 input (PDEX - 8A/4B)	
E49	**NFAT**	Connection error or internal pulse generator error at the PDEX5 – PUL9 entrance	
E50	**NFAT**	Connection error or internal pulse generator error at input PDEX5 – PUL10	

Message code	Message type	Cause of the error message	Resolving the error message
E51	**NFAT**	Too much air in the fuel.The air flow sensor at the outlet of the pump's air separator has remained active for longer than the time specified by parameter M10-P03.	Check for leaks in the intake manifold.
E52	**NFAT**	Too much air in the fuel. Maximum number of air separation attempts exceeded	Check for leaks in the intake manifold.
E53	**NFAT**	The dispenser door (cover) has been opened The cover sensor has been triggered.	Close all doors and covers of the meter and clear the errors by entering the manager or service level configuration mode via the remote control.
E76	**NFAT**	Corrupted stored value of the meter's zero point The stored CRC values for the meter's zero point do not match.	The meter zero point must be set. Turn the dispenser power off and then back on. If the fault persists, contact an authorized service center.
E80	**NFAT**	The display serial number does not match The display's serial number is different from the stored one. Error message code details: E80-1 The serial number of the main display does not match E80-2 The serial number of the auxiliary display does not match	The error appears after replacing the display. You must store the serial numbers of the peripheral units. Contact an authorized service center
E82	**NFAT**	The serial number of the electromechanical totalizer unit does not match. The serial number of the electromechanical totalizer unit is different from the one stored.	The error appears after the totalizer unit has been replaced. You must store the serial numbers of the peripheral units. Contact an authorized service center.

Message code	Message type	Cause of the error message	Resolving the error message
E83	**NFAT**	The serial number of the PDEINP temperature sensor unit does not match. The serial number of the PDEINP unit is different from the one stored.	The error appears after replacing the PDEINP unit. You must store the serial numbers of the peripheral units. Contact an authorized service center.
E85	**NFAT**	The serial number of the PDEDPS pressure sensor unit does not match. The serial number of the PDEDPS unit is different from the one stored.	The error appears after replacing the PDEDPS unit. You must store the serial numbers of the peripheral units. Contact an authorized service center.
E87	**NFAT**	Failure of the electromechanical totalizer coil The additional number in the error message corresponds to the totalizer number.	The totalizer coil must be replaced. Contact an authorized service center.
E89	**NFAT**	Failure of the PDEDPS pressure sensor unit The unit is not communicating or has an incorrect checksum.	Check the connection of the PDEDPS unit and its address setting. Contact an authorized service center.
E90	**NFAT**	Flow detected in the auxiliary meter during main meter calibration	Check that the auxiliary pump motor is disconnected during main meter calibration and verify the functionality of the valves and check valves in the hydraulic system. Contact an authorized service center.
E91	**NFAT**	Flow detected in the main meter during calibration of the auxiliary meter	Check that the main pump motor is disconnected during calibration of the auxiliary meter and verify the functionality of the valves and check valves in the hydraulic system. Contact an authorized service center.

6.2.2. EVENT LOG

Every PDEX5 meter includes an optional event logging device, known as the LOGGER. This is an optional external memory that saves all important events related to the operation of the electronic meter and the meter cabinet. The logging device is located on the processor board, and access to the storage medium is protected by a cover that can be secured with a security sticker to prevent unauthorized removal. The recorded events help service technicians identify any problems and quickly pinpoint their cause. The logger organizes the information into folders by type.

The logger contains, for example, the following information:

CONFIG	All changes related to meter parameter settings and dispenser configuration settings
ERROR	Log of all errors
FUELING	Log of all fueling transactions
SERVICE	Log of all logins in service mode, service password changes, etc.
SYSTEM	Log of events related to powering on and off, meter reset, etc.
CNG	Log of temperature compensation calculations and leak tests

6.3. DISPENSER SUPPORT

- Service work is performed in accordance with the service station's operating procedures
- Before beginning maintenance, the dispenser must be turned off, clearly marked with a "OUT OF SERVICE" sign, and the driveway must be marked with a "NO ENTRY" sign
- The dispenser must be disconnected from the power supply (turn off the main switch on the electrical panel)
- The valves on the fuel line must be fully closed
- During maintenance work, vehicle traffic must be prevented within a 5-meter radius
- A fire extinguisher must be made available to workers
- Maintenance work may only be performed by an authorized technician

6.3.1. ACCESSORIES

- Installation and User Manual
- Certificate of product quality and completeness
- EU Declaration of Conformity
- Technical data sheet for the dispenser
- Register of all meters installed in the dispenser
- IR controller for meter operation and configuration (can be ordered with dispensers equipped with a PDEX5 meter)
- Foundation frame (available for order)

Spare Parts Catalog
This document is intended exclusively for service companies and service technicians.

7. INSTALLATION PLANS

7.1. FUEL DISPENSER ANCHORING

1. anchored to a wooden pallet

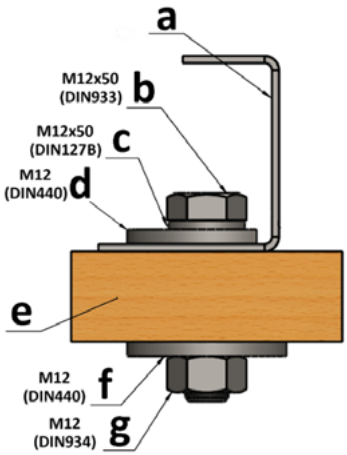

2. anchored to a metal base frame

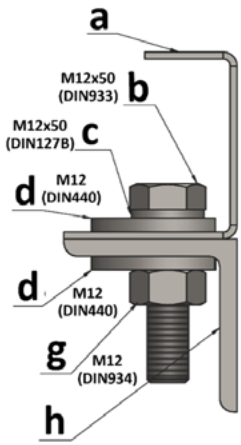

3. anchored in concrete

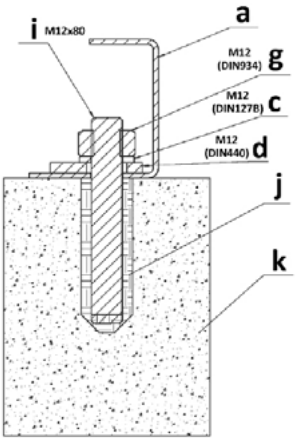

short M12 washer

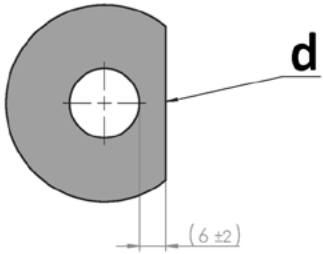

a) dispenser base
b) M12x50 screw
c) M12 washer
d) M12 split washer
e) wooden pallet
f) M12 washer,
g) M12 nut
h) base
base
i) M12x80 threaded rod
j) chemical anchor
k) concrete

7.2. FOUNDATION PLANS FOR FUEL DISPENSERS

Key

1	Oval Flange PN6 DN32 (G 1·") per EN 13 1365 (see images in section 1.1.6 D)
2	Suction tube 44.5 x 2.5 mm (outer diameter)
3	Containment tank
5	Mounting holes (for M12x50 bolts)
6	Power cable outlet(s) (max. cable bundle diameter 50 mm, min. free cable length 1.5 m)
7	Signal cable outlet(s) (max. cable bundle diameter 50 mm, min. free cable length 1.5 m)
8	Vapor Recovery Pipe Axis
9	Suction pipe axis
17	Triangular flange for connecting the suction pump inlet or check valve
18	Suction pump
19	Flat cork gasket for suction pump inlet, 2 pcs.
20	Check valve, type FV - 1037 A#002
21	Flexible hose, 270 mm long, terminated with a T90 oval flange and a triangular flange
22	Flat cork gasket for oval flange
23	M8x35 bolt (DIN 912) with M8 spring washer, 3 pcs.
24	M12x50 bolt (DIN 933) with M12 spring washer (DIN 127), 2 pcs.

7.2.1. SELF-SERVICE HD

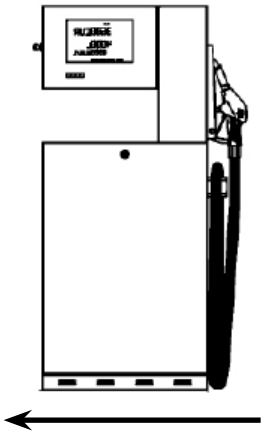

Piusi Self Service HD 80 lpm
(suction version)

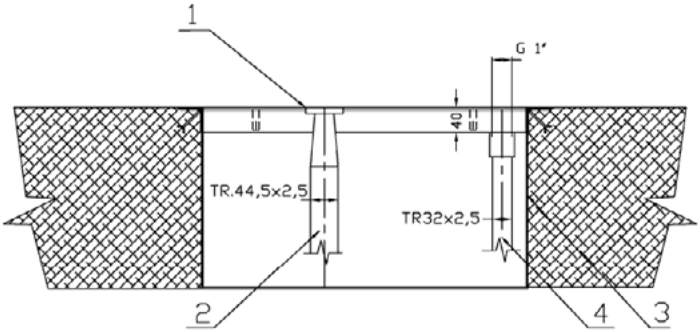

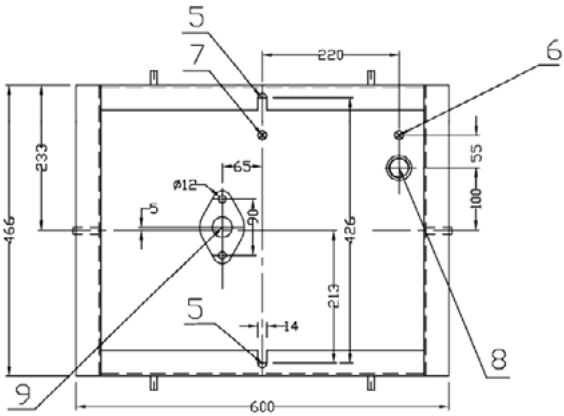

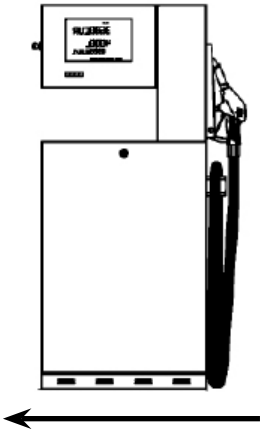

Piusi Self Service HD 40/110 lpm
(suction version)

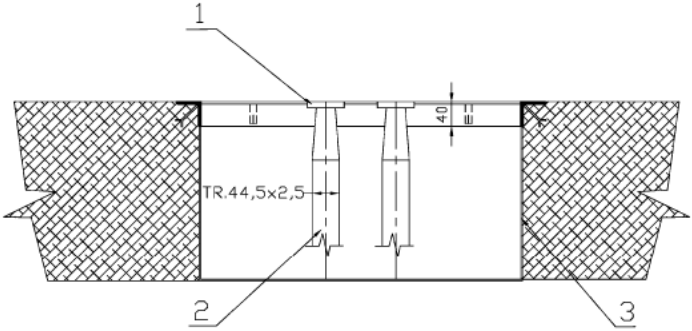

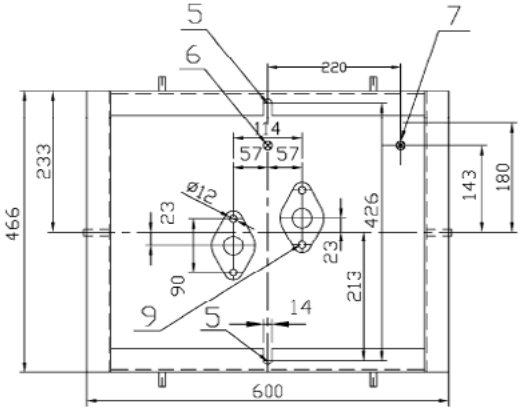

7.2.2.PIPE CONNECTIONS

A. Suction hose

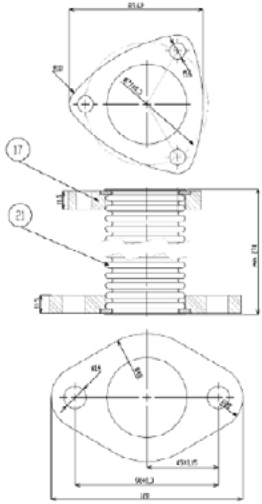

B. Connection of the FP-1001 suction pump

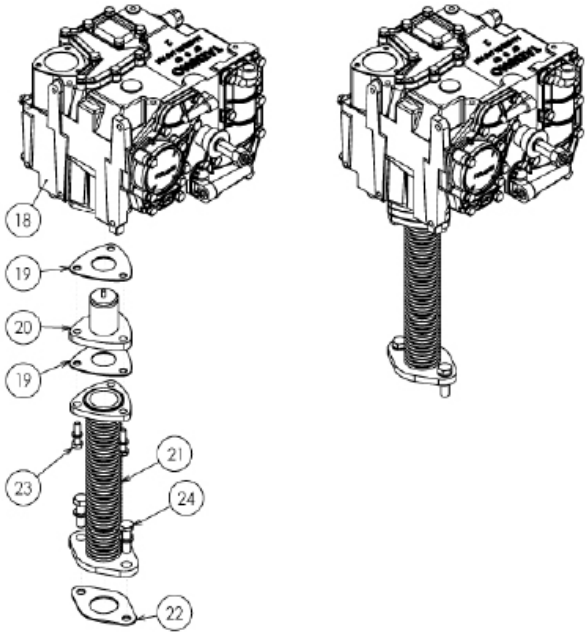

C. Suction hoses for suction-type dispensers

TW connecting hose DN40 - 82 mm - 290 mm

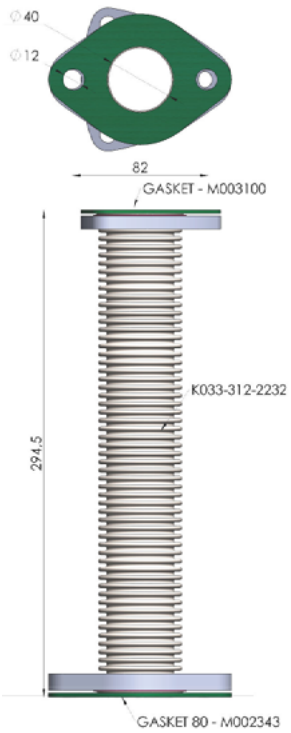

TW connecting hose DN40 - 90 mm - 290 mm

TW connecting hose DN40 - G 1 1/2" male (external thread)

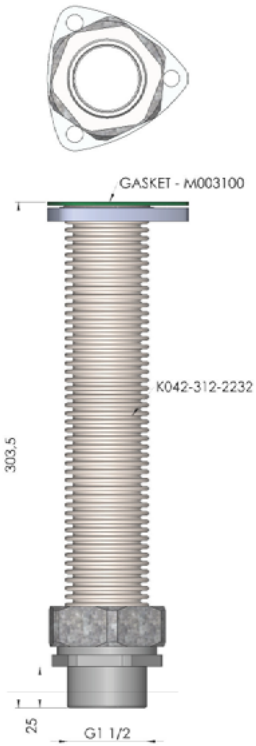

8. ELECTRICAL DIAGRAMS

The recommended electrical connections are only schematic and apply only to the basic versions of fuel dispensers. It is always necessary to follow local regulations at the installation site.
A standard XSO1B distribution box is used for the data line connection, suitable for an RS485 data line (PDE, DART protocols...).
Instead of this distribution box, another one may be used (see the list of data and signal boxes at the end of this chapter), which is suitable for another type of data line (LOGITRON current loop, Modbus...) or is used for the simultaneous connection of level meters in the tank or nozzle position sensors of satellite fuel dispensers.

Key

2	Electric motor switch with thermal and short-circuit protection
3	Electronic control unit power supply protection switch
4	UPS with power stabilization
5	Power protection switch for UPS
6	Personal workstation (cabinet)
7	Main control panel for service station technology
8	Data converter (RS485 / RS232) or control device
9	Control device (PC, payment terminal, console, etc.)
10	Power cable for electronic head, type HO5VV5-F 3x1.5
11	Power cable for suction pump and vapor recovery motor, type HO5VV5-F 4x1.5
11a	Power cable for vapor extraction and recovery pump motor, type HO5VV5-F 3x3.5
12	Data cable for RS485 or current loop, type HO5VVC4V5-K 5xO.5
13a	Combined distribution box with power supply for computer, electric motors, and data line

8.1. FUEL DISPENSER

8.1.1. SUCTION-TYPE DISPENSER

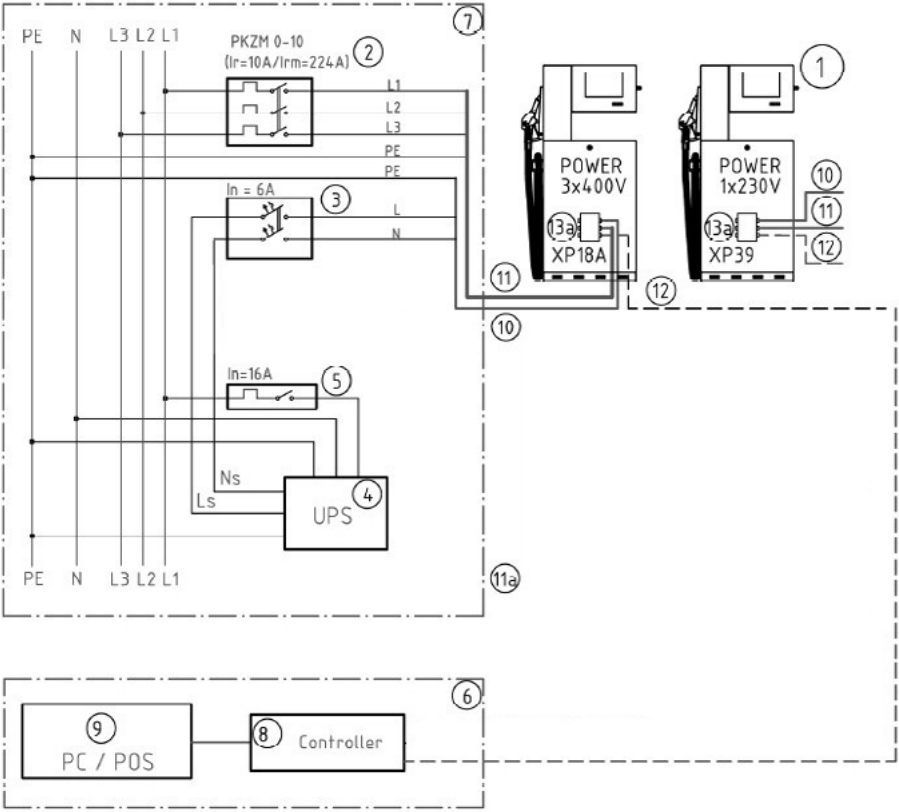

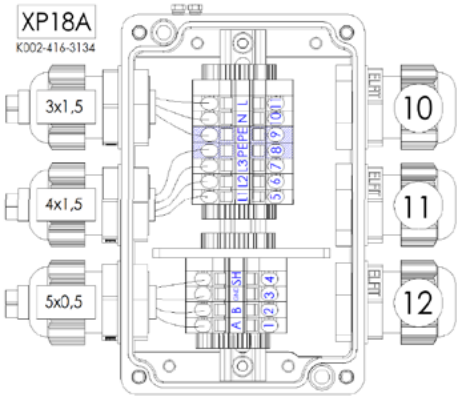

1x 230VAC, 3x 400VAC (motor), DATA (PDE)

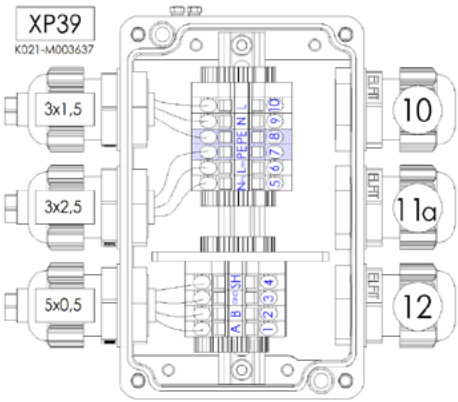

1x 230VAC, 1x 230VAC (motor), DATA (PDE)

9. EX ZONES

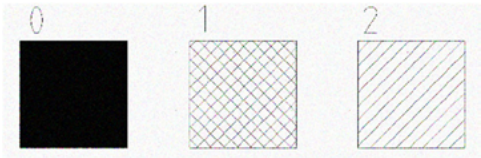

Key

0	Zone 0, explosive atmosphere present continuously or for long periods or frequently
1	Zone 1, explosive atmosphere likely during normal operations, present occasionally
2	Zone 2, explosive atmosphere not likely during normal operations but only in rare cases or for short periods
3	Vertical vapor barrier - Type 1, EN 13617-1:2013 (detail)
4	Non-explosive cable gland Ex e II (IP67)
5	Non-hazardous area (IP54)
6	Horizontal vapor protection (detail)

9.1. FUEL DISPENSERS

9.1.1. PIUSI SELF SERVICE HD

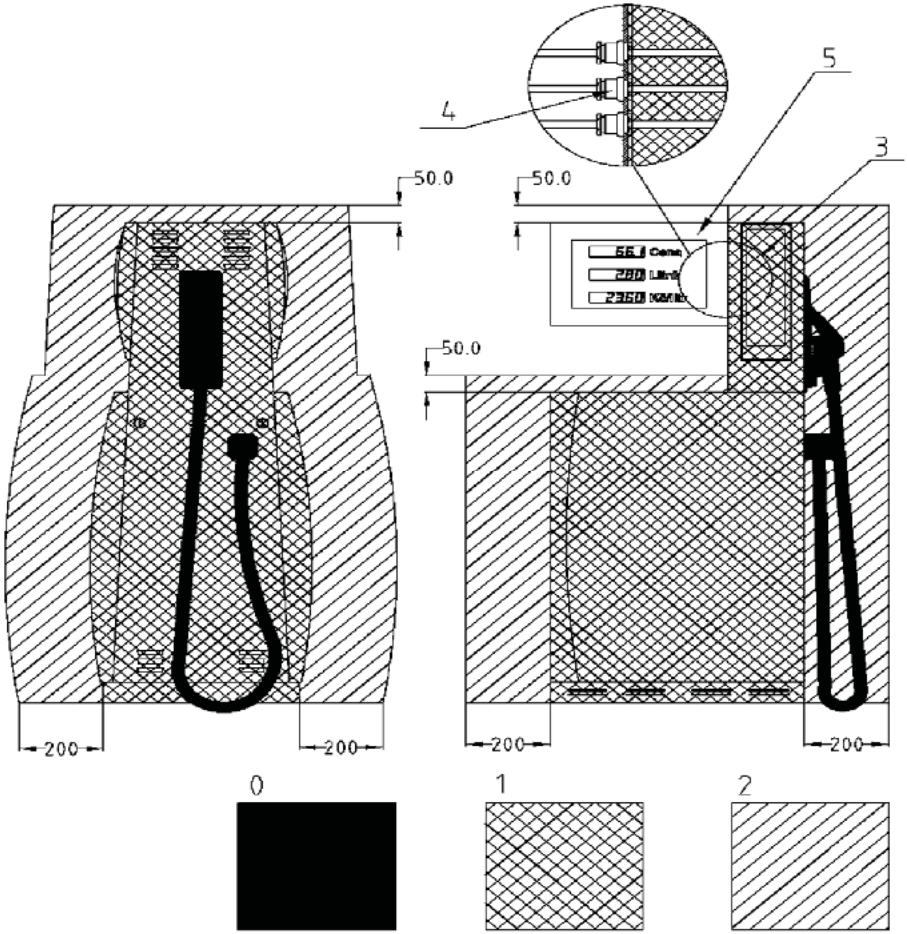

10. DEMOLITION AND DISPOSAL

Background	In case of demolition of the system, the parts of which it is composed should be entrusted to companies specialized in industrial waste disposal and recycling, and in particular:
Disposal of packaging	The packaging consists of biodegradable cardboard that can be handed over to companies for normal pulp recovery.
Disposal of metal parts	Metal parts, whether painted or stainless steel, are normally recoverable by companies specializing in metal scrapping.
Disposal of electrical and electronic components	They must mandatorily be disposed of by companies specialized in the disposal of electronic components, in accordance with the guidance of Directive 2012/19/EU (see directive text below).
Environment-related information for customers residing in the European Union	The European Directive 2012/19/EU requires that equipment marked with this symbol on the product and/or packaging must not be disposed of together with unsorted municipal waste. The symbol indicates that this product should not be disposed of together with normal household waste. It is the owner's responsibility to dispose of both these products and other electrical and electronic equipment through the specific collection facilities designated by the government or local public agencies.
	Disposal of Waste Electronic and Electrical Equipment (WEEE) as household waste is strictly prohibited. This type of waste must be disposed of separately.
	Any hazardous substances in electrical and electronic equipment and/or improper use of such equipment can have possible serious consequences for the environment and human health.
	If such waste is disposed of improperly, the penalties provided for in current regulations may be applied
Disposal of additional parts	Additional constituent parts, such as hoses, rubber seals, plastic parts and wiring harnesses, are to be entrusted to companies specializing in industrial waste disposal.

PIUSI

piusi.com

PIUSI SpA • Suzzara MN Italy

BULLETIN MO852EN_00

06.2026